PROBLEM Solver™ BULLETIN

BULLETIN: 25945

Premature Ball Joint Wear

Ford Econoline Vans 1992–2004

PROBLEM:

Non-serviceable joints experience premature wear in harsh fleet environments

- Requirements of fleet vehicles in the service and delivery industry impose severe demands on Ford E-Series van suspensions. Non-serviceable parts cannot support these harsh demands.

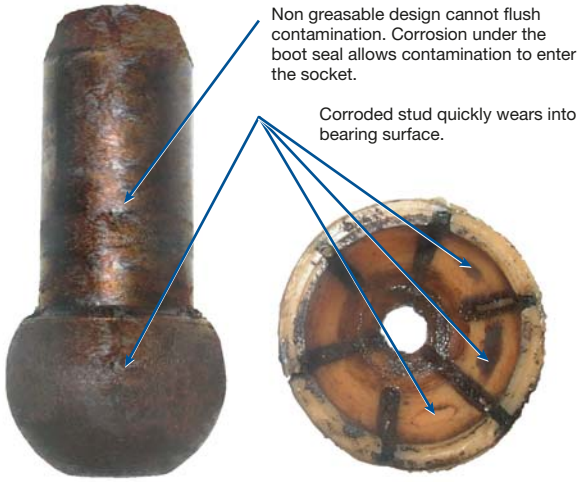

Description	Application	Replacement Part No.
Upper Ball Joint	1992–2004 Ford E-150 Econoline, E-250 Econoline and E-350 Econoline	K8608T
Lower Ball Joint	1992–2004 Ford E-250 Econoline and E-350 Econoline	K8609T
Lower Ball Joint	1992–2004 Ford E-150 Econoline	K8611T

SOLUTION:

MOOG® K8608T, K8609T, K8611T

- The MOOG greaseable K8608T, K8609T and K8611T ball joints use hardened powdered metal bearings providing the most durable bearing surface available for fleet applications.
- A premium polychloroprene boot with a special grease relief valve, a patented assembly process and premium materials provides the most durable part available.

K8608T

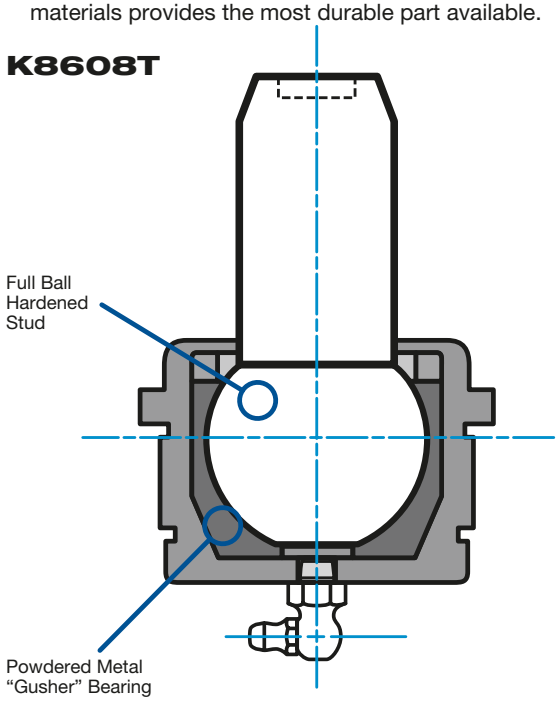

Be Car Care Aware™

MOOG® CHASSIS PARTS™

The Problem Solver™

FEDERAL-MOGUL MOTORPARTS

©2015 Federal-Mogul Motorparts Corporation. NASCAR is a registered trademark of NASCAR, Inc. MOOG and The Problem Solver are trademarks owned by Federal-Mogul Corporation, or one or more of its subsidiaries, in one or more countries. All other trademarks are the property of their respective owners. All rights reserved.