FORD RANGER 24 & 25+

REVOLVER X2 & X4s INSTALLATION SHEET

CUSTOMER SERVICE
PHONE: 818-365-9000, Mon-Fri 8:30 am - 6:00 pm EST
EMAIL: CustomerSupport@bakindustries.com

Prior to installation, it is important to examine the bed rails of your vehicle to accurately determine which model year you have. For our purposes, if your bed rail stake pocket covers look like picture A, we refer to your truck as the 2024 model year. If they look like picture B, we refer to your truck as the 2025 model year.

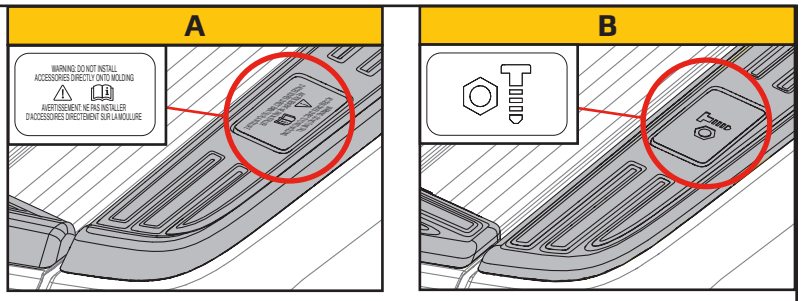

NOTE: It is important that all areas where the bed cover mounts are clean and free of debris prior to installing.

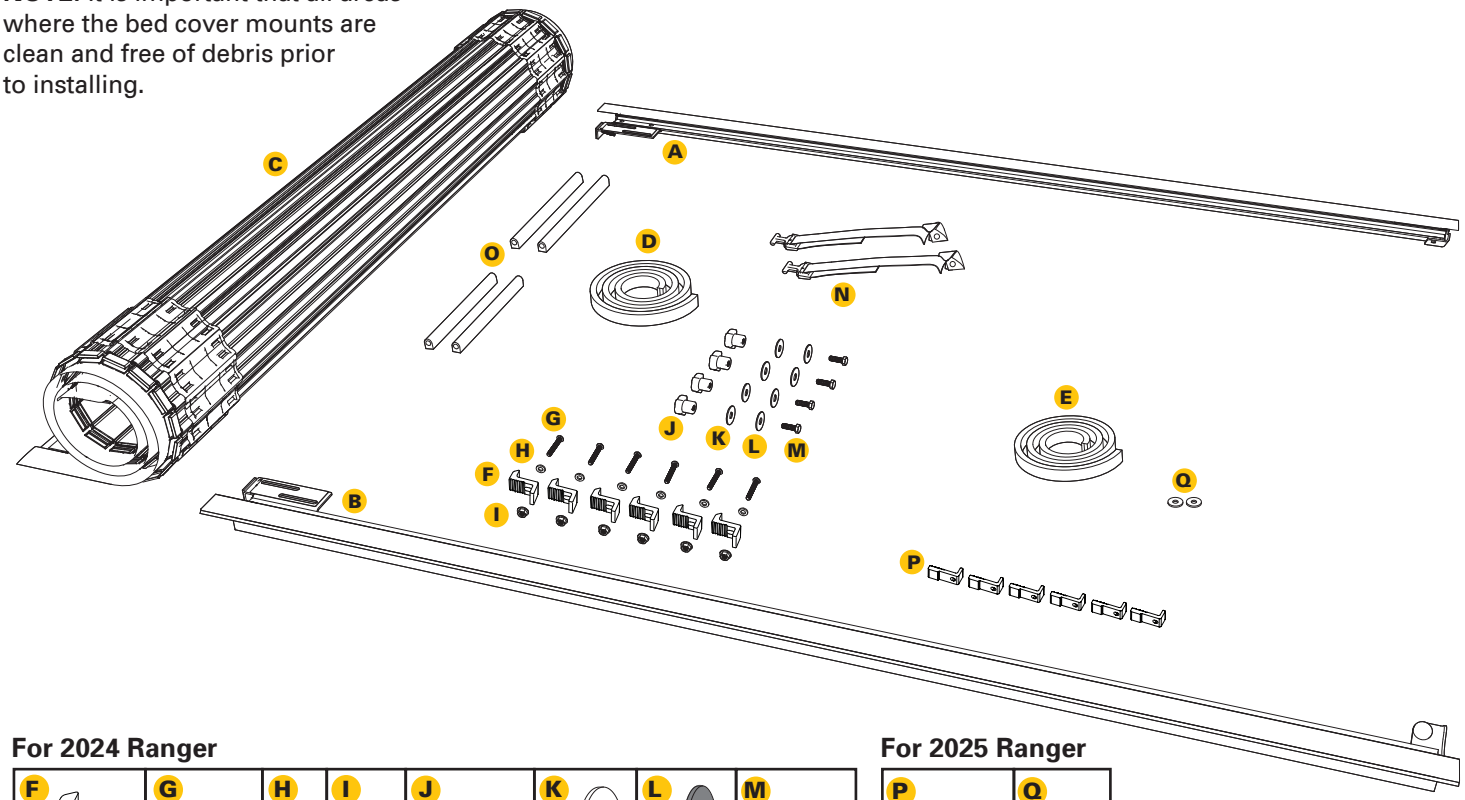

For 2024 Ranger

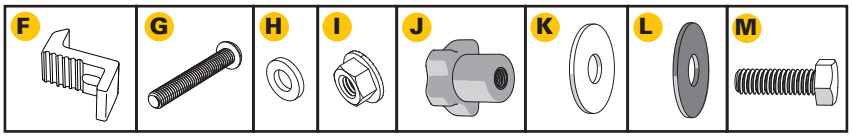

For 2025 Ranger

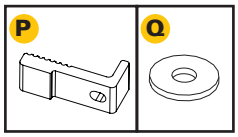

PARTS INCLUDED IN YOUR KIT

- A 1x Passenger side cover rail
- B 1x Driver side cover rail
- C 1x Bed cover
- D 1x Bulkhead seal
- E 1x Bulkhead seal *(For 25 Models Only)*

1 HARDWARE BAG INCLUDING (2024)

- F 6x Clamps
- G 6x Clamp bolts
- H 6x clamp washers
- I 6x clamp nuts
- J 4x Lock knobs
- K 4x Large flat washers
- L 4x Rubber washers
- M 4x Mounting bolts
- N 2x Cover straps
- O 4x D-shaped bumpers

1 HARDWARE BAG INCLUDING (2025)

Note: Components G-O are the same in this kit along with the two listed below.

- P 6x Clamps
- Q 2x Oversized washers

TOOLS REQUIRED

- 9/16” wrench or socket
- 10mm wrench or socket
- 30 Torx wrench

TOOLS RECOMMENDED

- Torque wrench
- Blow dryer or heat gun

 ©RealTruck Group, Inc., 2026 Part# 318S0169 Rev. 09-30-26

⚠ IMPORTANT

READ BEFORE YOU BEGIN INSTALLATION

IT IS CRITICAL FOR YOUR SAFETY THAT YOU CAREFULLY READ AND FOLLOW THE SAFETY CAUTIONS AND INSTALLATION INSTRUCTIONS BOTH PRIOR TO AND DURING INSTALLATION.

USER SAFETY CAUTION

During installation, be mindful of the potential for sharp edges on the product or vehicle. Taking proper safety precautions helps ensure a safe and smooth installation process.

Always wear protective gloves and handle components with care to reduce the risk of injury.



COVER ATTACHMENT WARNING

A partially rolled up or unsecured cover may detach during transit, risking vehicle or property damage and personal injury.

Always verify the tonneau cover is properly secured before operating the vehicle.



PINCH POINT SAFETY CAUTION

This tonneau cover may create pinch points when closing or operating near solid surfaces such as the truck bed rails or tailgate. To prevent injury, keep hands, fingers, and other body parts clear of moving parts during operation.

Always operate the cover slowly and with caution to ensure safe and proper use.



CARGO TRANSPORT WARNING

When transporting cargo that is taller than the truck bed, the cover must be fully rolled open and securely fastened with both retainer straps. An unsecured cover can detach while driving, risking vehicle or property damage and personal injury.

Never operate the vehicle with a partially rolled up cover.



TEMPERATURE SURFACE CAUTION

During high temperatures or extended sun exposure, surfaces of this product may become hot to the touch, posing a risk of burns or injury. Use caution when handling the product in hot weather and allow time for it to cool before contact.

Always check surface temperature before use to ensure safe handling conditions.



ENTRAPMENT SAFETY WARNING

This tonneau cover does not feature a manual release mechanism from inside the truck bed. To prevent the risk of entrapment, never allow anyone to be inside the bed of the truck when the cover is closed.

Always ensure the area is clear before closing the cover, and keep the cover securely latched when not in use to avoid accidental closure.

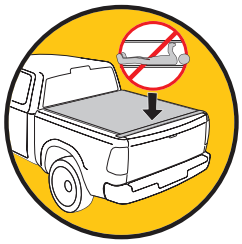

FASTENER TORQUE CAUTION

All fasteners must be tightened to the specified torque values provided in the installation instructions to ensure proper fit and safe operation of the tonneau cover. Under- or over-tightening can lead to product failure, potential damage to your vehicle, injury, or safety hazards while driving.

Always use a calibrated torque wrench and follow the specifications in the installation instructions.

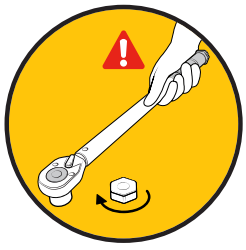

COVER POSITION WARNING

Before operating the vehicle, always verify the tonneau cover is either fully rolled open and secured with both T-hook buckles or fully rolled closed and securely latched down.

Never operate the vehicle if the tonneau cover is not properly secured.

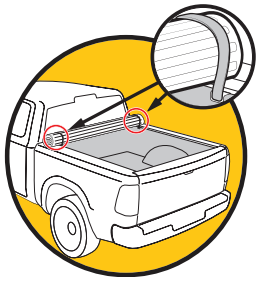

1 Install the bulkhead seal. Clean the top of the bulkhead where the seal will go with soap and water to remove dirt and debris. Then clean the same area with isopropyl alcohol to remove wax or grease and to evaporate any remaining water. Allow the surface to dry. The seal should be placed flush with the front edge of the bulkhead and should be snug between the truck bed rails. Peel the backing paper from the bulkhead seal (D) for **2024 models** and bulkhead seal (E) for **2025 models** and apply pressure to the entire seal to make sure that the adhesion is good.

FOR 2024

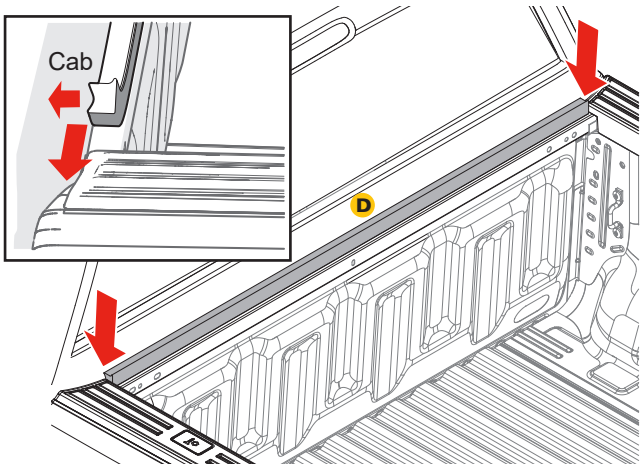

FOR 2025

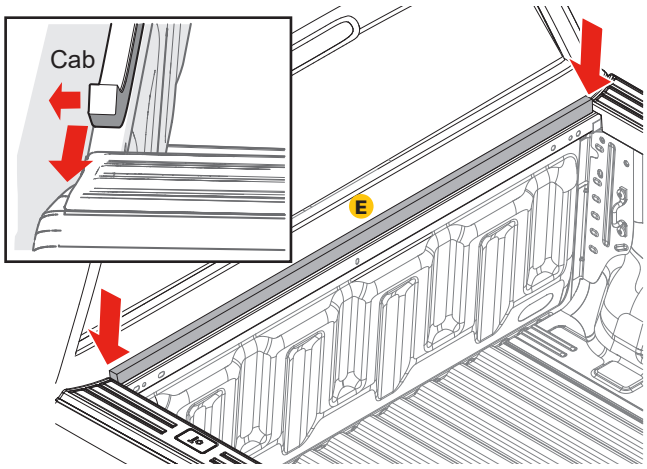

2 Remove three of the four factory plastic clips as shown below. Pry out the center first, then pry out the entire clip. These will not be used again unless you permanently remove the bed cover assembly.

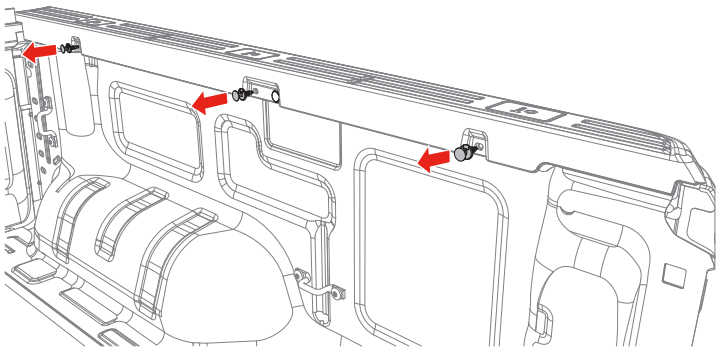

3 Position the cover rail (A) on the truck rail with the slotted bracket pushed all the way toward the front/cab and the bulkhead. If the truck is equipped with a drop-in bedliner, remove the foam pads located at the front of the slotted brackets.

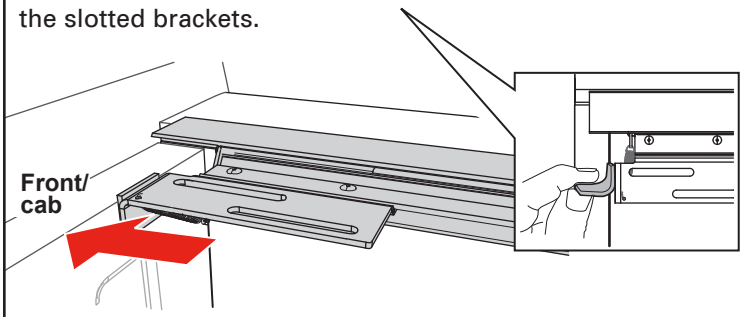

NOTE: Some drop-in bedliners may require trimming in the corners to fit the rail into the opening.

4 **4a** - **FOR 2024 RANGERS**: Install a rail clamp (F) at each point where the plastic clips were removed. Install the clamp up into the cover rail (A), making sure that it is inserted all the way up into the rail with the teeth of the clamp aligned with the slots in the rail. Insert a clamp bolt (G) through a clamp washer (H), through the clamp, and through the truck bed rail. Thread a clamp nut (I) onto the bolt.

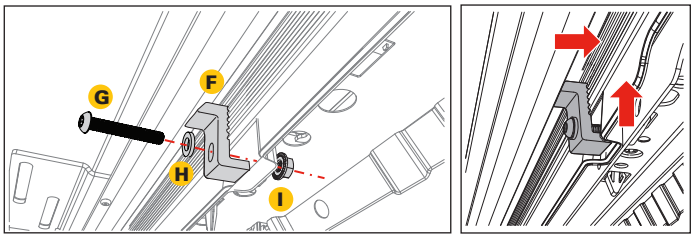

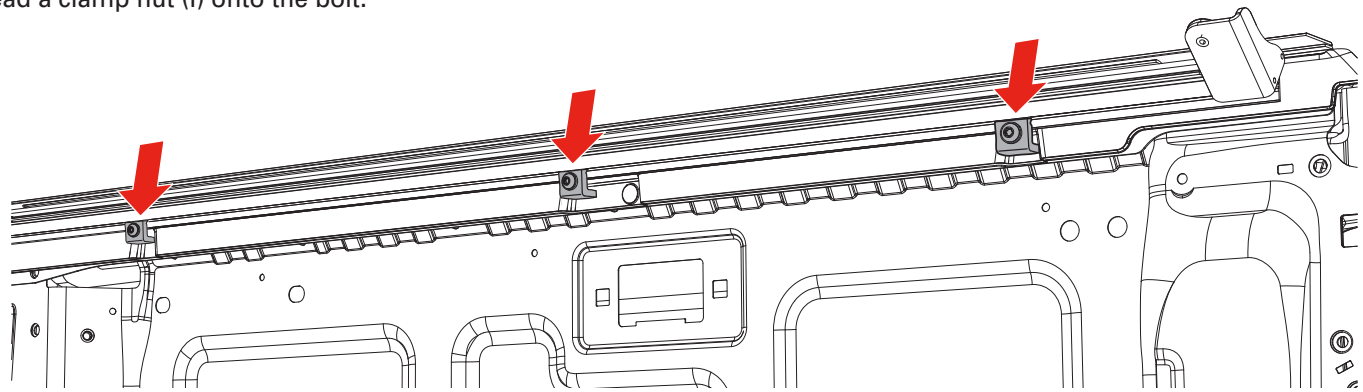

4b - **FOR 2024 RANGERS**: Mount the cover strap (N) to the forward most clamp (F) as shown. Use the provided washer (H) to retain the strap. Tighten to **8 ft/lbs (11Nm) of torque.** Mount a strap to both sides.⚠

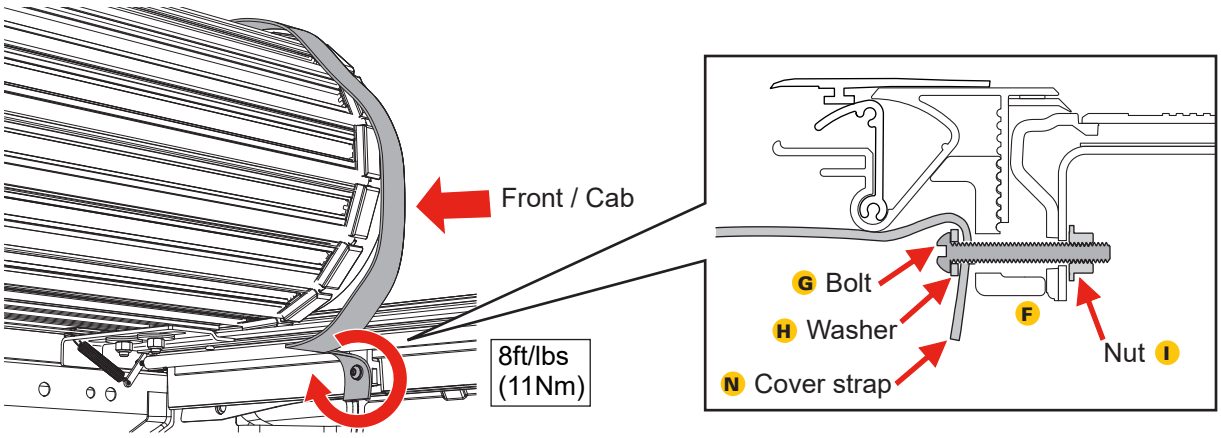

4c - **FOR 2025 RANGERS**: Install a rail clamp (P) at each point where the plastic clips were removed. Install the clamp up into the cover rail (A), making sure that it is inserted all the way up into the rail with the teeth of the clamp aligned with the slots in the rail. Insert a clamp bolt (G) through clamp washer (H), through the clamp, and through the truck bed rail. Thread a clamp nut (I) onto the bolt.

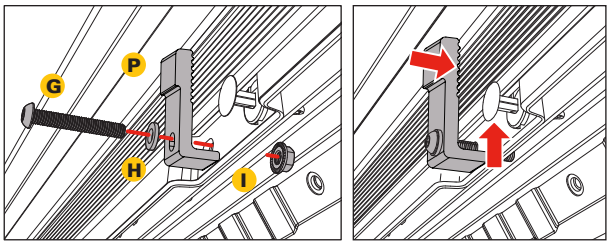

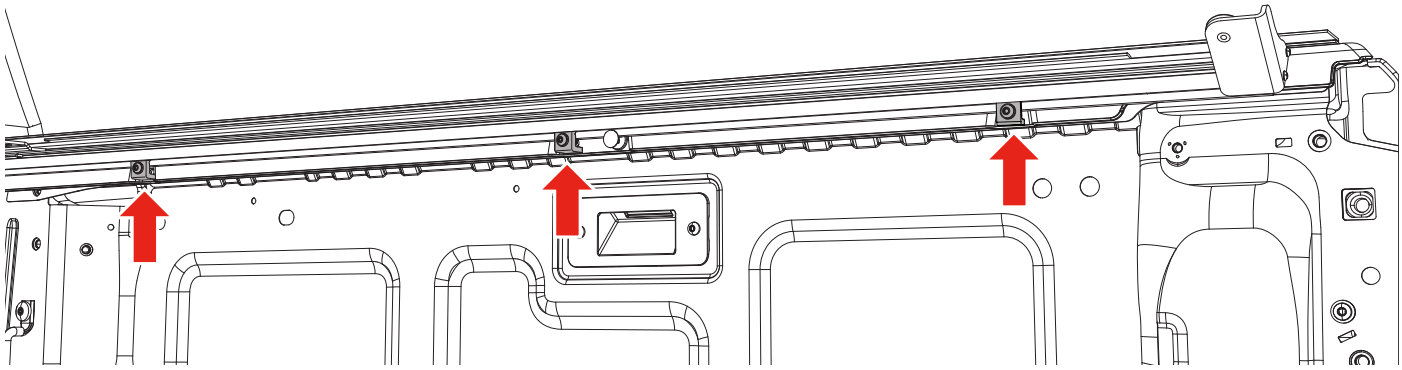

4d - **FOR 2025 RANGERS**: Mount the cover strap (N) and the forward most clamp (P) as shown. Use the provided oversized washer (Q) to retain the strap. Tighten to **8ft/lbs (11Nm) of torque.** ⚠

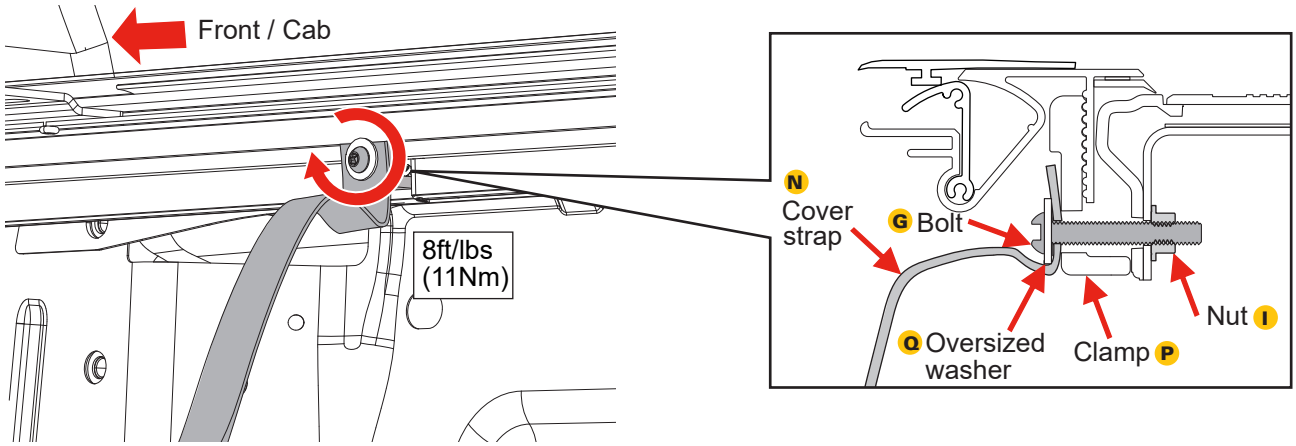

5 Starting with the front clamp (F) for **2024 models** or front clamp (P) for **2025 models**, apply downward pressure to the cover rail (A & B) while tightening the bolt. Tighten to **8 ft/lbs (11 Nm) of torque**. Repeat with the middle and then rear clamp, making sure that the rail is square and flat with the truck bed rail. Repeat steps 3-5 on the driver side. ⚠

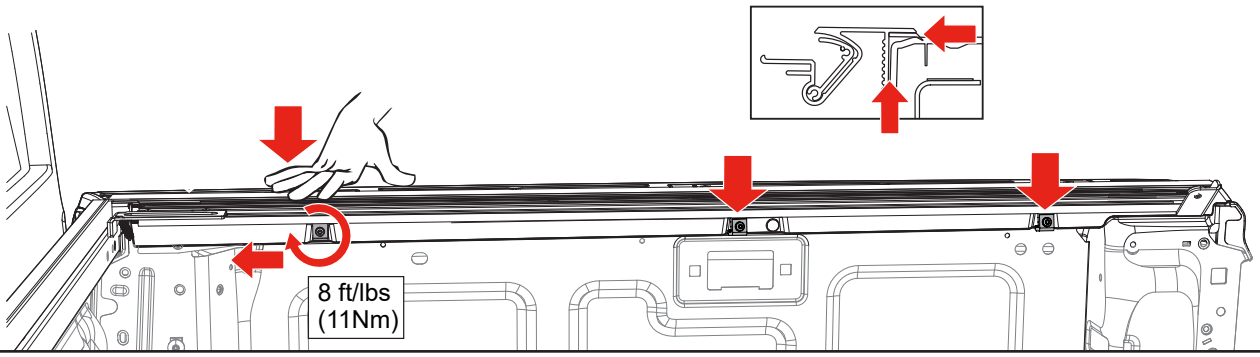

6 With both cover rails (A & B) in place, check that the tailgate clears the overhanging edge of the cover rails on both sides. The edge of the cover rail may contact the tailgate cap. If this happens, loosen the rear clamp (F) for **2024 models** or the rear clamp (P) for **2025 models** and adjust the height of the rail.
Re-tighten the clamps to the specifications in step 5.

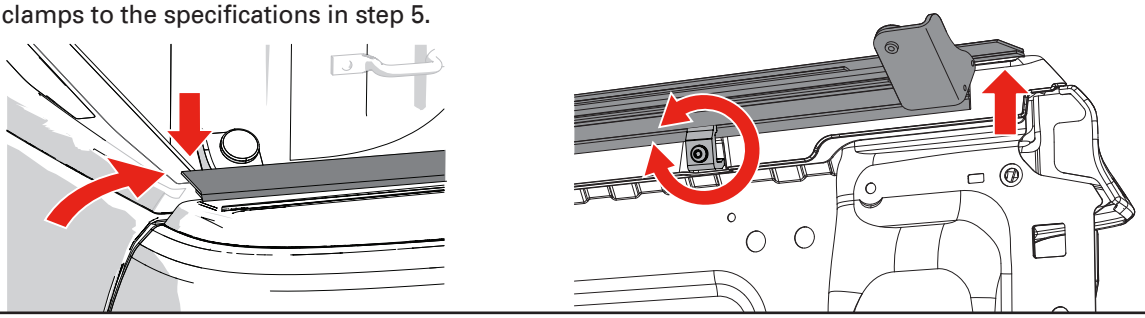

8 Align the front vinyl edge of the cover (C) with the front edge of the cover rails (A & B) (not the rubber seal).

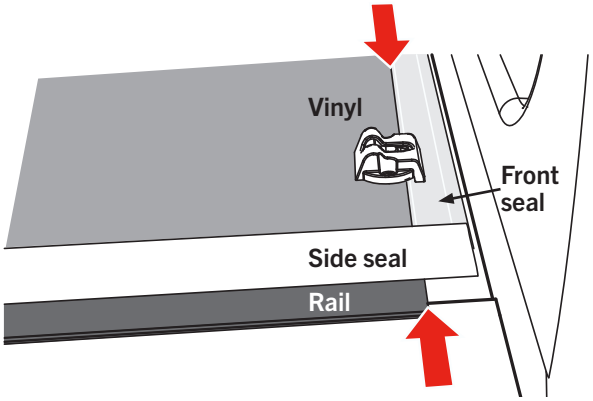

9 With both rails (A & B) clamped in place, rest the rolled cover (C) onto the rails at the cab, roll the cover toward the tailgate, remove and discard all packaging materials. Fold the front panel back and insert the two mounting bolts (M) into the two slots, do this for both sides. The bolts will align with the slotted bracket of the cover rail (A & B). Fold the panel back down.

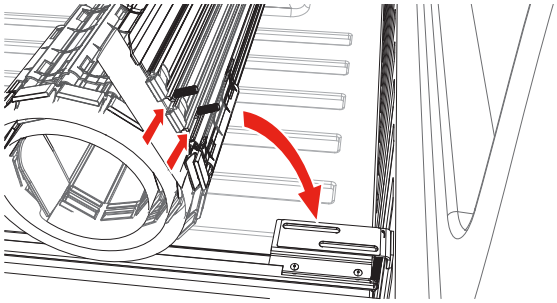

10 Install the mounting hardware loosely underneath the slotted bracket on the passenger cover rail (A).Start with the rubber washer (L), then the large flat washer (K), then hand tighten the knobs (J). Repeat on the driver side. Leave the knobs loose for now.

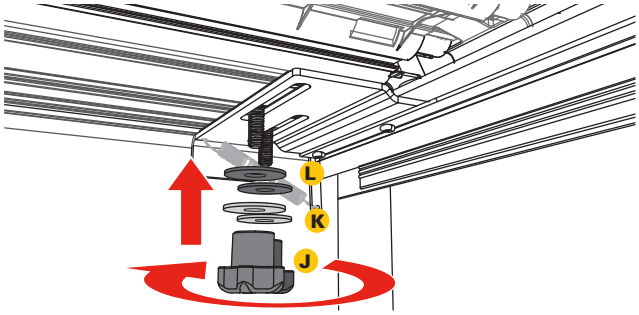

11 Open and close the cover (C) several times to verify that it rolls freely. The cover should be square with the cover rails (A & B) and roll freely between the rails.

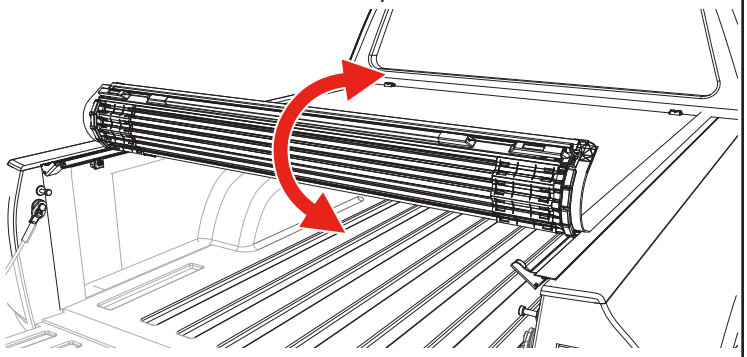

12 Verify that a gap of approximately 1/8" (3.2mm) remains on both sides of the cover (C) between the edge of the cover rail (A & B) and the rolling cover. This spacing is necessary to ensure that the locking rail secures to cover. Align the cover side to side at the front and/or the back if the side gaps are not even.

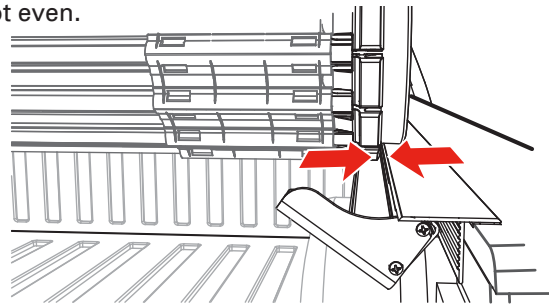

13 With the cover (C) closed, push the cover toward the tailgate to position it for contact with the D-seal and the tailgate.

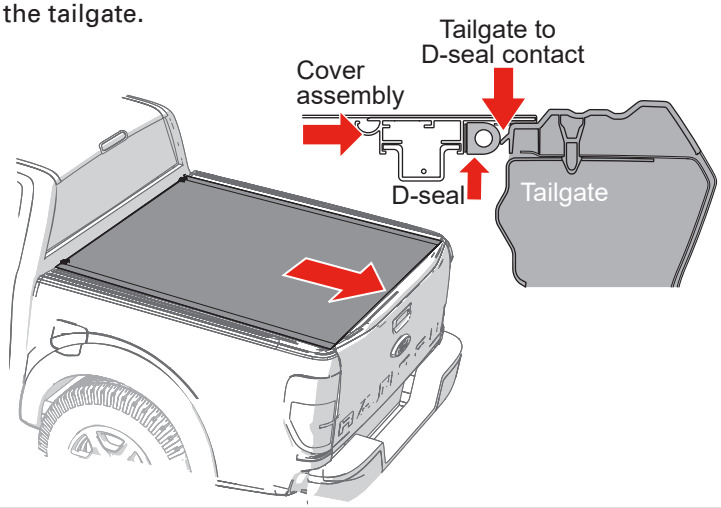

14 Check to see that the latches on both sides at the tail gate fully engage the cover rails (A & B). Loosening the knobs (I) and making the side to side adjustment as in step 12 could help with the latch striker engagement.

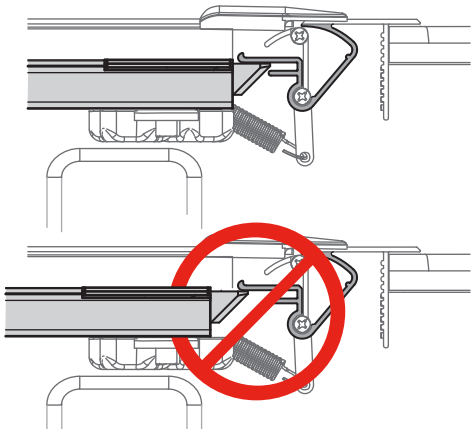

15 When correctly installed, the vinyl edges of the cover (C) will align squarely with the cover rails (A & B) in all four corners. The latch assembly will align with the rail locking levers at the tailgate on both sides.

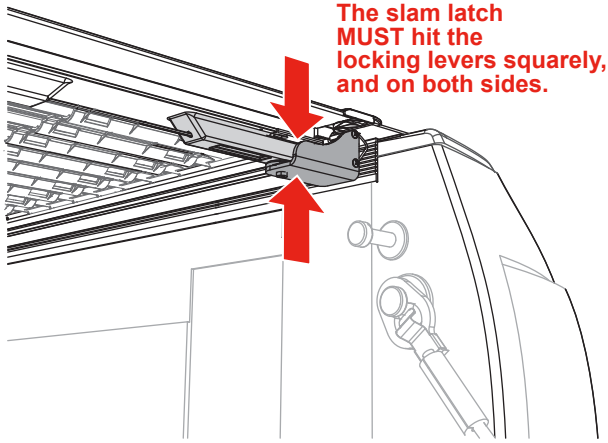

16 When the cover (C) is properly aligned, roll the cover open, ensuring not to misalign while opening, tighten the knobs (J) on both sides to secure the cover.
DO NOT overtighten. Hand tighten only.
Recheck that the cover operates correctly. Close the cover and check that the locking levers are engaged and prevent the cover from being lifted on both sides. ⚠

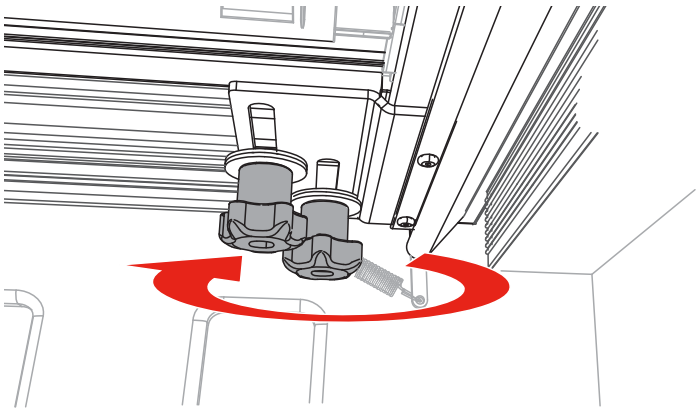

17 The other end of the cover strap (N) inserts into the cover clasp and turns to lock.

Pull up on the strap end to tighten

Always hook the straps on both sides. ⚠

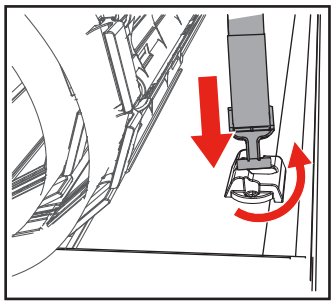

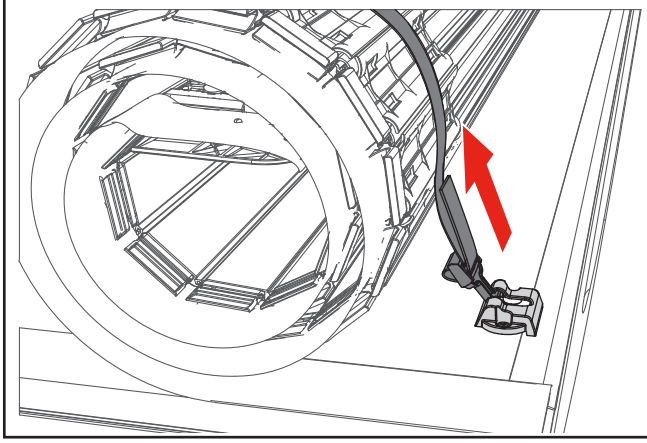

18 With the cover (C) rolled open install the four D-shaped bumpers (O) to the cover slats.

Clean the surface where the seal will go with soap and water to remove dirt and debris. Then clean the same area with isopropyl alcohol to remove wax or grease and to evaporate any remaining water. Allow the surface to dry. Position the bumpers so that they prevent the cover from contacting the cab. The straps will secure the cover away from the cab and glass. Peel the backing paper from the seal and apply pressure to the entire seal to make sure that the adhesion is good.

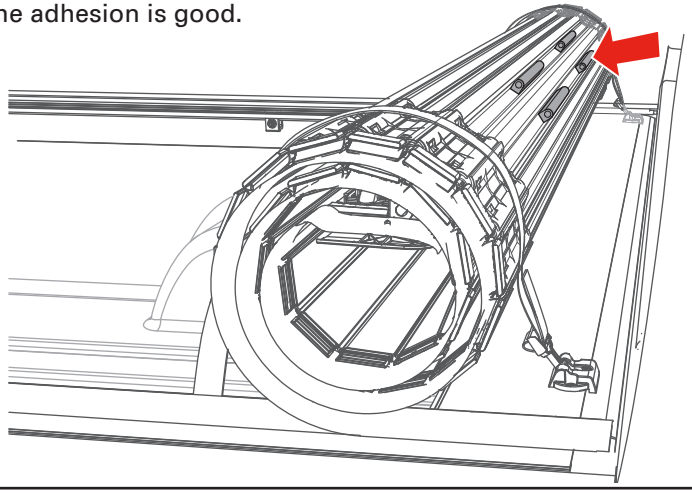

Note: If the side seals of the cover appear wrinkled, exposure to the sun will assist the seals to lay flat. Applying heat with a hair dryer or carefully with a heat gun will also smooth the seals.

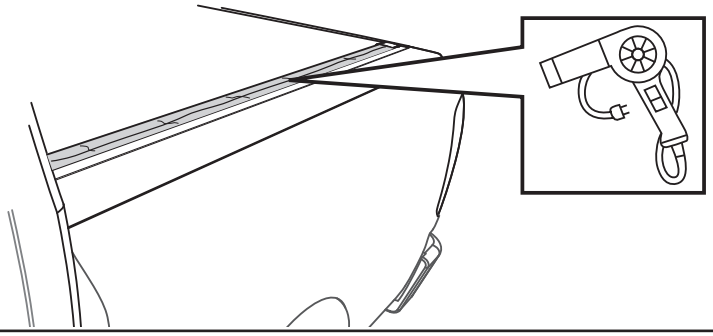

OPENING COVER: Pull down on the latch release cable located on either side of the cover (C) and rotate the tail rail forward and into a rolling motion. When driving with the cover open, the cover must be rolled toward the cab and secured with both strap clamps.

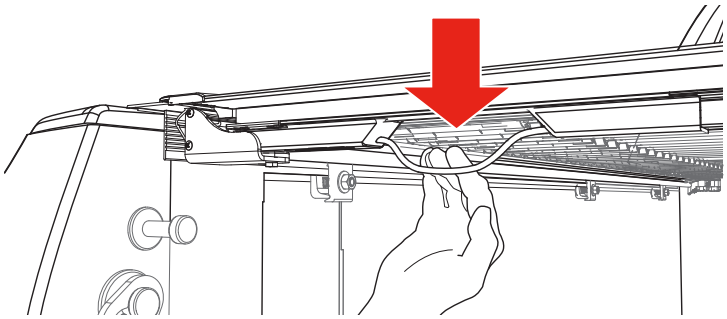

ROLLED UP POSITION: To drive with the cover (C) in the open position, use the cover straps (N). Roll the cover forward, twist and insert the clips into the cover clasps. Ensure that **BOTH** strap clamps are fully inserted into the clasps, pull on the end of the strap to tighten. ⚠

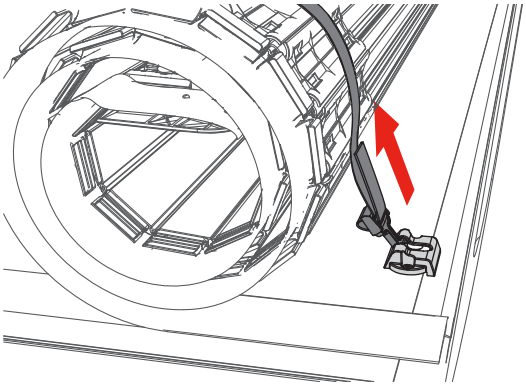

Prior to vehicle operation, the truck bed cover MUST be properly secured.

CLOSING COVER: Roll the cover (C) toward the tailgate and rotate the tail rail down to lock the latches into the rotating locking levers. Note that the locking levers and latches will make a click sound when engaged.

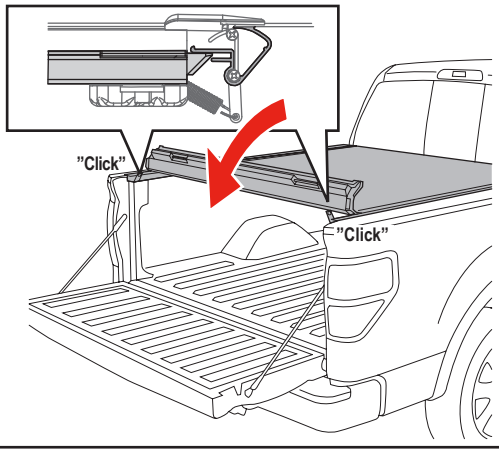

COVER CLOSED: The cover (C) must be **FULLY LATCHED ON BOTH SIDES** of the cover rails (A & B).

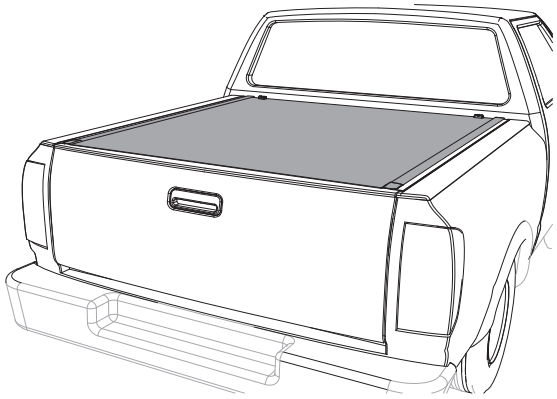

Prior to vehicle operation, the truck bed cover MUST be properly secured.

CARE AND MAINTENANCE

The truck bed cover requires occasional cleaning with mild automotive soap and water only. Avoid using abrasive cleaners as they may dull the finish. Some chemicals and fluids such as insect repellents, oils, solvents, and lubricants could potentially damage the rubber hinges and seals and void the warranty.

CAUTION

Always read the ingredients of any product you are using to clean your truck bed cover. Make sure that you use only products that are safe for use with rubber. Many cleaners contain chemicals that could permanently discolor or damage your hinges and seals.

Periodically check that your cover is securely attached to your truck bed and working as intended. Inspect all hardware such as clamps and cover retainer clamps to ensure they are properly installed and working as intended. Covers that are used at high frequency or subject to rough roadways and/or heavy vibration conditions may cause the cover to require adjustment. ⚠

It is also recommended that you regularly inspect and service each panel latch. Clean away any excess dirt or grime. Ensure all latches move freely in and properly engage the side rail to provide optimal performance and security.

SAFETY INSTRUCTIONS ⚠

- DO NOT place objects on or against cover or framework.
- DO NOT tie cargo to truck bed cover or framework.
- DO NOT operate vehicle with objects on top of the cover.
- NEVER allow children or pets to occupy the truck bed with the cover in the fully closed position.
- The cover is not airtight. Special care is required to keep cargo clean and dry.
- Truck bed covers will not prevent theft of contents inside the truck bed.

TROUBLESHOOTING TIPS

Leaning Rails: If the rails are leaning down, have one person stand on the outside of the bed and slightly roll the rails upward while another person slowly snugs the clamps up. If the clamps are tightened too quickly or overtightened, it will cause the rails to lean down. ⚠

Water Intrusion: Make sure the retaining clamps are tight and properly engaged to the side rails. Check that the bulkhead seal is in place and the cover is resting on it. Make sure that all latches are engaged to the side rails and adjust if needed. Check that the side rails are installed flush with the top of the bed rail.

Sticking Latch: The cable could be pinched in or under the cable guide extrusion. Loosen the three screws on the center cable cover (bar), located in the middle of the panel. Slightly lift up on the cable guide extrusion. Pull on both sides of the cable.

Wavy Side Seal: The seal may be wavy when removed from the box. Allow ample sunlight for seal to lay flat and relax.

LIMITED WARRANTY

WARRANTY COVERAGE

This truck bed cover is warrantied against defects in materials or workmanship as follows. This warranty is void if the product has been damaged in an accident, or due to neglect, unforeseeable use, improper installation, improper servicing, or other cause not arising out of defects in material or workmanship.

Revolver X2 - The truck bed cover carries a limited warranty for **three (3) years** from the original date of purchase, subject to the terms below.

Revolver X4s - The truck bed cover carries a limited warranty for **five (5) years** from the original date of purchase, subject to the terms below.

WARRANTY IS NOT TRANSFERABLE

The warranty is to the initial owner purchasing the truck bed cover and it is not transferrable to a subsequent end user. Proof of purchase may be required to enforce these warranty rights.

WARRANTY CONDITIONS

Failure to follow care and use instructions will void the warranty.

- Clean with mild automotive soap and water only.
- Cover must be secured at all points when vehicle is in motion.
- Check all clamps and retention mechanisms for tightness after a week of driving following installation (or re-installation) of the cover and periodically thereafter.
- Before opening, the cover must be free of all foreign materials including snow and ice.
- Do NOT tow your vehicle from the rear with the cover on your vehicle. If towing from the rear is required, the cover MUST be removed from the vehicle and properly stored.

WARRANTY PERFORMANCE

If all warranty conditions are met, a defective truck bed cover or hardware component will either be repaired or replaced (at our option). We reserve the right, for any warranty, to substitute a newer model or bed cover having similar form and function, to offer a warranty discount on an entire replacement system, and/or provide remedies other than those mentioned in this document.

WARRANTY RETURN

A Return Material Authorization number must be obtained from our Customer Service Department prior to returning any product. We may require the original item to be returned postage prepaid for final determination. Shipping charges will apply for any repair or replacement. Other than postage or shipping charges, no charge will be made for repair or replacement under this warranty.

This warranty gives you specific legal rights. As an owner, you may also have additional rights and remedies under the laws of your state.

WARRANTY REGISTRATION

Warranty registration must be on file and/or proof of original purchase (detailed and dated receipt) required for warranty to be effective.

https://realtruck.com/bak-warranty

REGISTER YOUR WARRANTY ONLINE