E-WM05-0010022AA
MOUNTING INSTRUCTION

IMPORTANT! READ THIS FIRST!

Installation of shock absorbers or other suspension components requires special tools and expert knowledge. Accordingly, installation of all BILSTEIN products must be performed by a professional automotive suspension technician.

When replacing other brands, BILSTEIN shock absorbers or other suspension components should always be installed as a set. All BILSTEIN products must only be used for the specific, intended application as indicated in the application guide. **Any use of any BILSTEIN product other than for its intended use may result in serious bodily injury or death.**

Always use a chassis hoist for the installation of BILSTEIN products and make certain that the raised vehicle is securely attached to the hoist and/or supported to prevent the vehicle from slipping, falling, or moving during the installation process.

If you install any BILSTEIN product without the necessary special tools, expertise, and chassis hoist, you may subject yourself to the risk of serious bodily injury or death.

BILSTEIN shock absorbers are gas-filled and are highly pressurized.

- Never place any BILSTEIN shock absorbers in a vise or use a clamp on any BILSTEIN shock absorber.
- Never apply heat near any BILSTEIN shock absorber.
- Never attempt to open or repair any BILSTEIN product, in order to prevent **serious bodily injury or death.**

Any attempt to misuse, misapply, modify, or tamper with any BILSTEIN suspension product voids any warranty and **may result in serious bodily injury or death.**

While installing any BILSTEIN product:

- Do not use impact tools for loosening or tightening fasteners, because this may destroy the screw threads.
- Self-locking fasteners must only be used **once**!
- Reuse original equipment components only if they are in good condition, otherwise replace them with new components.
- Never remove the slight film of oil on the shock absorber piston rod and seal.
- All mounting fasteners for shock absorbers and other suspension components must be securely tightened before tension is placed on the suspension system, unless otherwise specified in the manufacturer's service manual or in this instruction.

After installing any BILSTEIN product:

- The suspension caster and camber must be checked and/or adjusted to comply with the vehicle manufacturer's specifications.
- The (load dependent) brake compensator and the anti-lock brake system must be checked and/or reset to comply with the vehicle manufacturer's specifications.
- The headlight aim must be checked and adjusted. Or, if applicable, adaptive headlights must be checked and recalibrated to comply with the vehicle manufacturer's specifications.
- If applicable, any/all Advanced Driver Assistance Systems (ADAS) must be checked and recalibrated to comply with the vehicle manufacturer's specifications.

CAUTION for COILOVER TYPE SUSPENSIONS!!!

If disassembling a coilover type suspension, refer to the vehicle manufacturer's service manual for proper procedures. The coil spring is preloaded and must be compressed with a spring compressor to release load before the upper mount is disassembled. Failure to follow the vehicle manufacturer's procedures may cause serious injury or death, and may damage the vehicle.

IMPORTANT!!!

This BILSTEIN product may or may not be compatible with non-BILSTEIN aftermarket products and/or vehicle modifications. It is the responsibility of the professional automotive suspension technician performing the installation to identify any non-OEM components and/or modifications on the vehicle that may interact with the suspension system. These must be evaluated for any potential physical static or dynamic interference with and/or effect on the function of this BILSTEIN product.

E-WM05-0010022AA
MOUNTING INSTRUCTION

This instruction is for both left front (driver) 41-326701/41-326695 and right front (passenger) 41-326725/41-326718 B8 8112 shocks. A bill of materials of the included mounting parts kit is shown below.

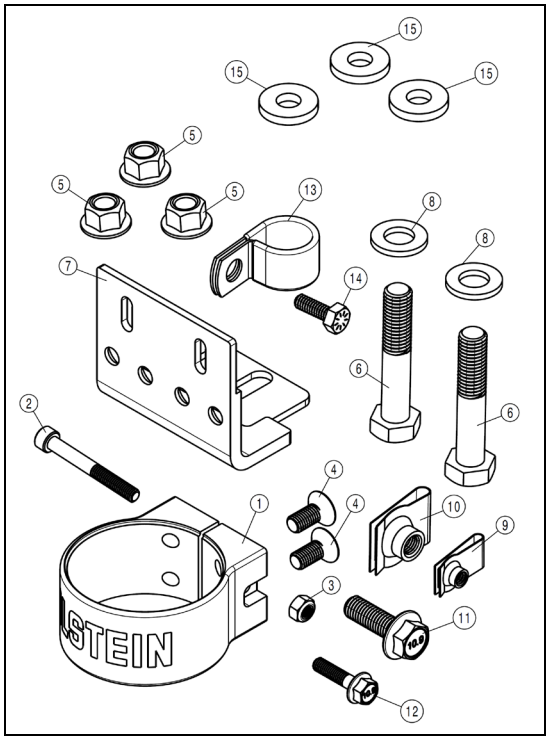

Bill of Materials – FRONT		
Item #	**Description**	**Qty**
1	Reservoir Clamp	1
2	Socket Head Cap Screw; M6x1; L = 50mm	1
3	Nylon-Insert Locknut; M6x1	1
4	Flat Head Cap Screw; M8x1.25; L=18mm	2
5	Flange Locknut; M10x1.5	3
6	Hex Head Cap Screw; M12x1.5; L = 65mm	2
7	Reservoir Mount Plate	1
8	Washer; M12x24; t=2.5mm	2
9	U-Nut; M6x1	1
10	U-Nut; M10x1.5	1
11	Flange Head Cap Screw; M10x1.5; L = 30mm	1
12	Flange Head Cap Screw; M6x1; L = 25mm	1
13	Hose Clamp	1
14	Hex Head Cap Screw; ¼”-20; L = ¾”	1
15	Washer; M10x25; t=4mm	3

B8 8112 Shock Installation Procedure:

A. Remove existing shock module from the vehicle following all procedures in the vehicle manufacturer's service manual.

B. Before installing the B8 8112 shocks on the vehicle check if they are set at the desired lift height. The pre-set lift heights can be different depending on the engine variant and year range. Use the tables below to determine if the pre-set lift height is what is desired:

'15-'20 F-150 4WD SuperCab/SuperCrew B8 8112 Typical Lift Heights**		'21+ F-150 4WD SuperCab/SuperCrew B8 8112 Typical Lift Heights**			
5.0L, 3.5L EcoBoost, 2.7L EcoBoost, 3.5L V6	**3.0L Diesel**	**Non-Tremor 5.0L, 3.5L EcoBoost**	**Non-Tremor 3.5L PowerBoost**	**Non-Tremor 2.7L EcoBoost**	**Tremor 5.0L, 3.5L EcoBoost**
2.3" lift	DO NOT USE	2.5" lift	1.6" lift	DO NOT USE	1.3" lift

Note that the pre-set lift height is too low for a '15-'20 3.0L Diesel and too high for a '21+ 2.7L EcoBoost and must be adjusted before installing on vehicle. Proceed to Step D for instructions on how to adjust the spring seat.

C. If the lift height listed above is not what is desired, proceed to Step D. Otherwise, skip to Step J.

D. Break the spring seat lock ring loose with the supplied spanner wrenches. Refer to Figure 1 below.

E. Note the clocking of the lower mount relative to the studs on the upper mount (important for reassembly).

F. Using an appropriate spring compressor, compress the spring until it can be rotated freely by hand. Then, spin the spring seat up or down depending on what the desired lift height is. See the lift height table on the next page for a few points of reference between the amount of exposed thread and estimated lift height. They are listed for stock weight vehicles.

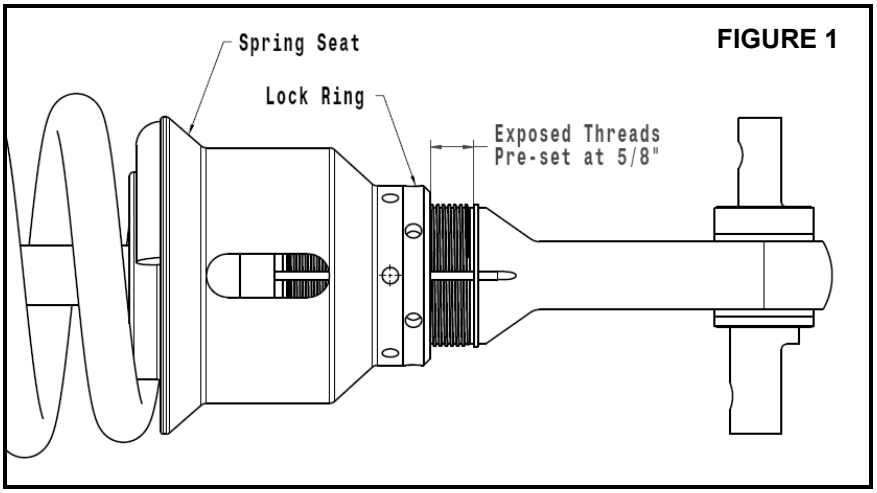

FIGURE 1

DO NOT EXCEED MAX LIFT HEIGHT LISTED FOR YOUR VEHICLE

	'15-'20 F-150 4WD SuperCab/SuperCrew B8 8112 Typical Lift Heights**		'21+ F-150 4WD SuperCab/SuperCrew B8 8112 Typical Lift Heights**			
Exposed Threads	**5.0L, 3.5L EcoBoost, 2.7L EcoBoost, 3.5L V6**	**3.0L Diesel**	**Non-Tremor 5.0L, 3.5L EcoBoost**	**Non-Tremor 3.5L PowerBoost**	**Non-Tremor 2.7L EcoBoost**	**Tremor 5.0L, 3.5L EcoBoost**
1 3/8"	DO NOT USE	2.2” lift	DO NOT USE	DO NOT USE	DO NOT USE	DO NOT USE
1 3/16"	DO NOT USE	2” lift	DO NOT USE	2.7” lift	DO NOT USE	2.1” lift
1"	DO NOT USE	1.8” lift	DO NOT USE	2.3” lift	DO NOT USE	1.8” lift
3/4"	DO NOT USE	1.5” lift	DO NOT USE	1.8” lift	DO NOT USE	1.5” lift
5/8"	2.3” lift	DO NOT USE	2.5” lift	1.6” lift	DO NOT USE	1.3” lift
1/2"	2.1” lift	DO NOT USE	2.2” lift	DO NOT USE	2.5” lift	1.1” lift
1/4"	1.8” lift	DO NOT USE	1.9” lift	DO NOT USE	2.2” lift	0.7” lift
0	1.5” lift	DO NOT USE	1.6” lift	DO NOT USE	1.8” lift	Stock

‘21+ models require use of aftermarket upper control arms for spring/spindle clearance at full droop, except for Tremor package.

** Lift heights indicated are typical. Actual lift height is influenced by which factory suspension the vehicle is equipped with and its condition; optional equipment and accessories on your vehicle, and other vehicle modifications such as replacement coil springs, wheel and tire combinations, etc. Modifying/lifting the suspension to your vehicle may raise its center of gravity and may make it more susceptible to loss of control and/or rollover, which may result in death or serious injury. We strongly recommend that you offset the loss of rollover resistance as much as possible by increasing tire track width. Wear seat belts at all times and avoid situations where a side rollover may occur.

It is normal to hear a slight audible clicking noise during compression and rebound strokes in the B8 8112 shocks, most notably during low velocity events. This is due to the internal pistons engaging each other creating the position sensitive compression and rebound zones.

NOTE: If you exceed the recommended spring seat adjustment range (exposed thread dimension) for your vehicle (needed for added front end weight from a steel bumper, winch, armor, etc.), make sure to measure the shock at ride height as shown on the next page after install. This is needed to ensure there is at least 1.75” of droop travel from static ride height and so the stiffer rebound zone is not being engaged at ride height.

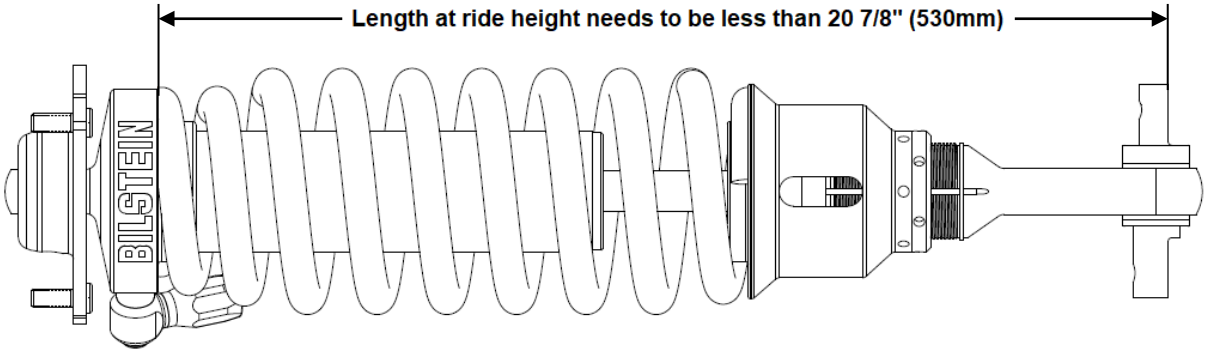

Front Module Installation Procedure

G. Once the desired lift height is set, tighten the lock ring against the spring seat using supplied spanner wrench.

Torque lock ring to spring seat to approximately 37 ft-lb (50 Nm).

H. Rotate the lower shock mount so it is aligned with the upper mount studs as noted in Step E. Ensure the set screw located on the lower heim spacer is facing inboard on the vehicle.

I. Slowly release the spring compressor.

J. Install the shock onto the vehicle as shown below, ensure the Bilstein lettering on the cap is facing outboard. Place the included Washers (BOM item #15) under each of the three Flange Locknuts (BOM item #5), and use a 15mm socket to attach the upper mount. Leave reservoir hanging temporarily towards the front of the vehicle (Note: below image is of right (passenger) side of vehicle).

Torque Flange Locknuts to 33 ft-lb (45 Nm).

K. Attach the lower shock mount with the M12x1.5 Hex Head Cap Screws (BOM item #6) and Washers (BOM item #8) from the bottom of the lower control arm threading up into the lower shock mount. Apply non-permanent thread locker and **torque Hex Head Cap Screws to 69 ft-lb (94 Nm).**







L. Prepare the reservoir support plates as shown below. Attach the Reservoir Clamp (BOM item #1) to the Support Plate (BOM item #7) using the two M8x1.25 Flat Head Cap Screws (BOM item #4). Apply a non-permanent thread locker and **torque Flat Head Cap Screws to 18 ft-lb (25 Nm).**

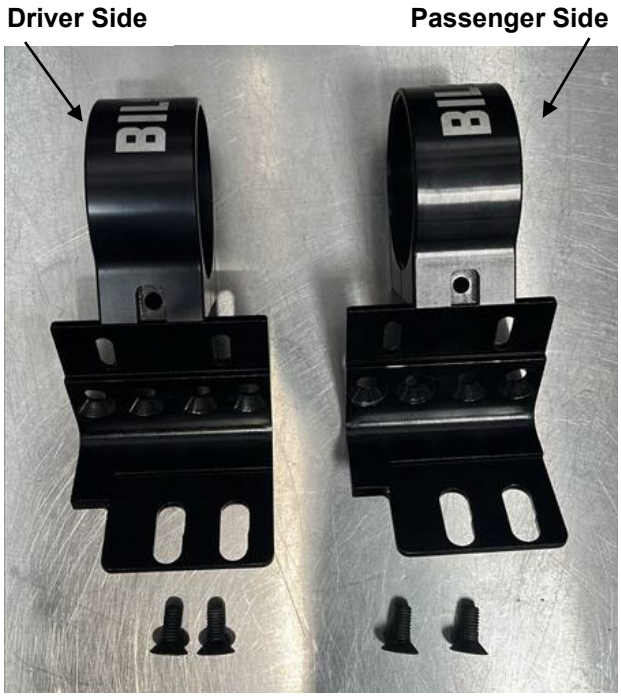



M. Install the M6x1 Socket Head Cap Screw (BOM item #2) and the M6 locknut (BOM item #3) on the Reservoir Clamp (BOM item #1) as shown below. Ensure the nut is located on the top of the assembly as this side will not be accessible after installation on the vehicle. Hand tighten for now allowing the reservoir to slide freely in and out of the Reservoir Clamp.

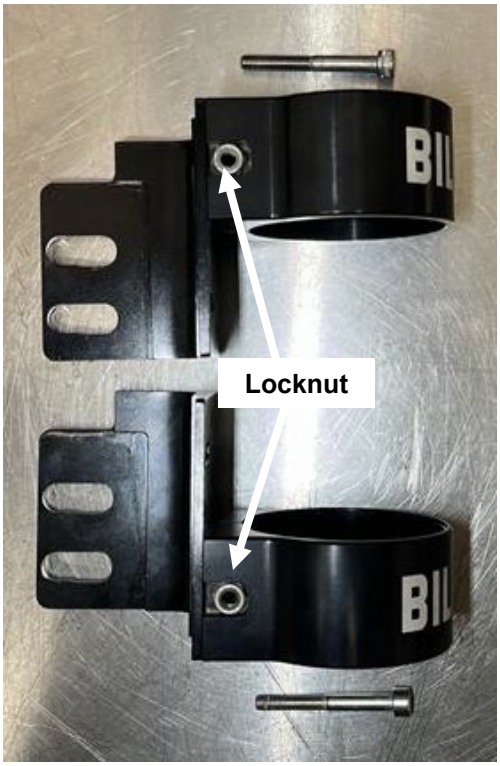

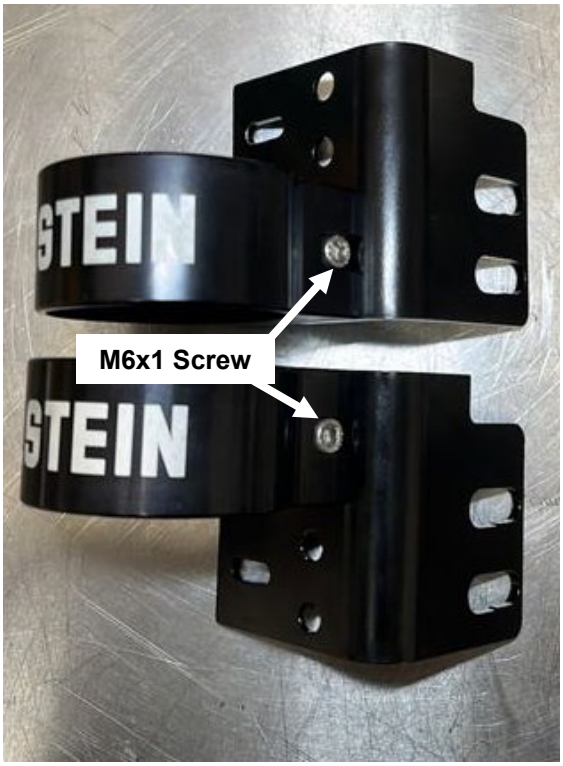

N. Locate the frame rail section in front of the wheel well and install the two U-Nuts provided as shown below. The M6 U-Nut (BOM item #9) is placed on the side of the frame rail and the M10 U-Nut (BOM item #10) is placed on the bottom of the frame rail (circled below). Ensure the threaded side of the U-Nut is inserted on the inside of the frame rail.

Driver Side



Passenger Side



O. For the turbo charged ECOBOOST models, you will need to remove the Inter-cooler Bracket bolt shown below. For these models, you will not need the M10 U-Nut (BOM item #10) and the M10x1.5 Flange Head Cap Screw (BOM item #11).

Driver Side



Passenger Side



P. Install the Reservoir Support Assembly onto the frame rail as shown below using the M10x1.5 Flange Head Cap Screw (BOM item #11) and the M6x1 Flange Head Cap Screw (BOM item #12). For the turbo charged ECOBOOST models the Reservoir Support Assembly gets sandwiched between the Inter-cooler bracket and the frame rail. Apply non-permanent thread locker and while holding the Reservoir Support Assembly tight to the frame rail, **torque Flange Head Cap Screws to 16 ft-lb (22 Nm).**

Driver Side



Passenger Side





Q. Slide the reservoir through the Reservoir Clamp (BOM item #1) enough to take out most of the slack of the Reservoir Hose. For the driver side, the reservoir should measure approx. 3.25” (83mm) from the Reservoir Clamp to the hose side of the reservoir as shown below and the passenger side should measure approx. 4.125” (105mm).

Driver Side



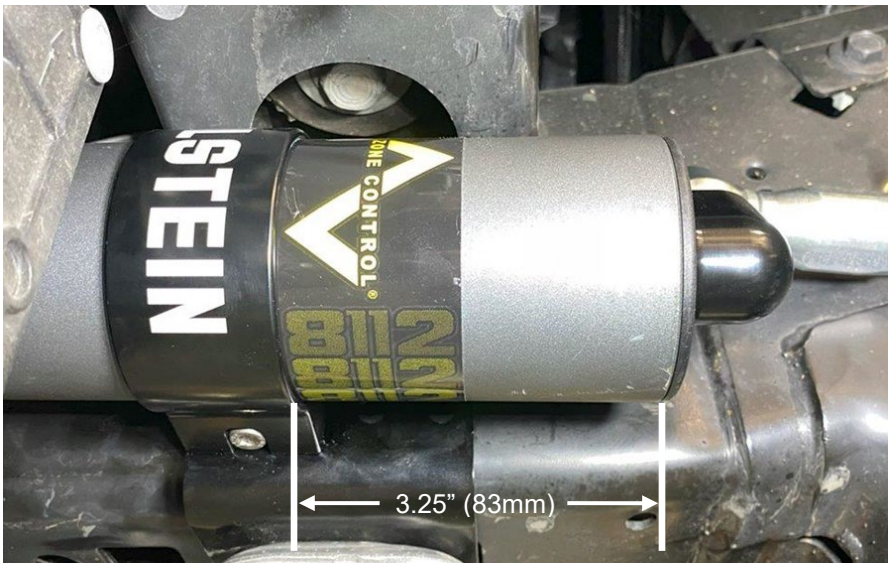

Passenger Side





R. Clock each reservoir so that the hose fitting is no more than ¼" away from the frame rail but not touching as shown below.



S. Now tighten the M6x1 Socket Head Cap Screw (BOM item #2), **torque to 6 ft-lb (8 Nm).**

T. To ensure the Reservoir Hose stays tight against the frame rail, a hose clamp (BOM item #13) is included in the mounting hardware. Find a good place on the frame rail where the hose clamp can be installed (see below).

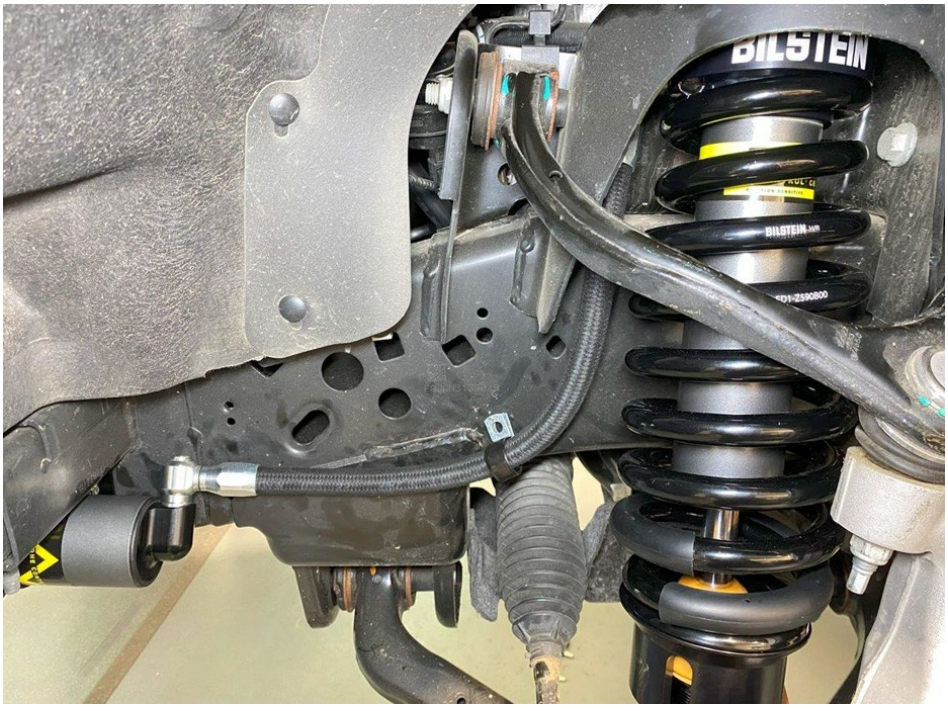

U. In the location you have picked for the hose clamp, use a hammer and punch to mark the location of the hole to drill. In the punched location, use a #7 (0.201") drill bit to drill a hole in the frame. Using a ¼"-20 tap and cutting oil, tap the hole.

V. Now install the ¼"-20 Hex Head Cap Screw (BOM item #14) in the hole securing the hose clamp and the hose to the frame as shown below. Apply a non-permanent thread locker and **torque the Hex Head Cap Screw to 16 ft-lb (22 Nm).**



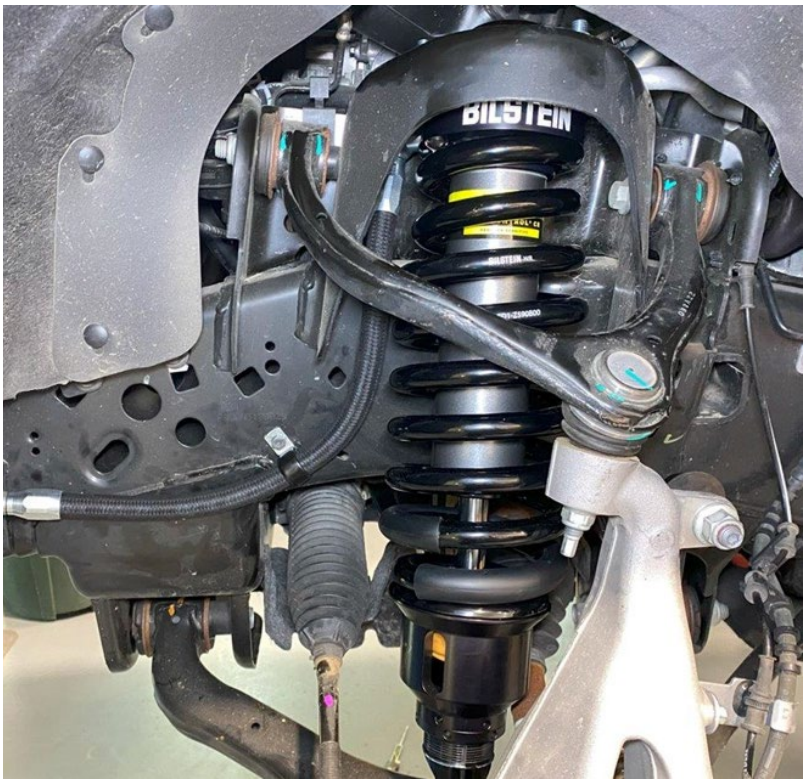

W. Check wheel alignment and adjust to vehicle manufacturer's specifications. This completes the installation.

Final left front (driver) 41-326701 B8 8112 shock installed on vehicle:

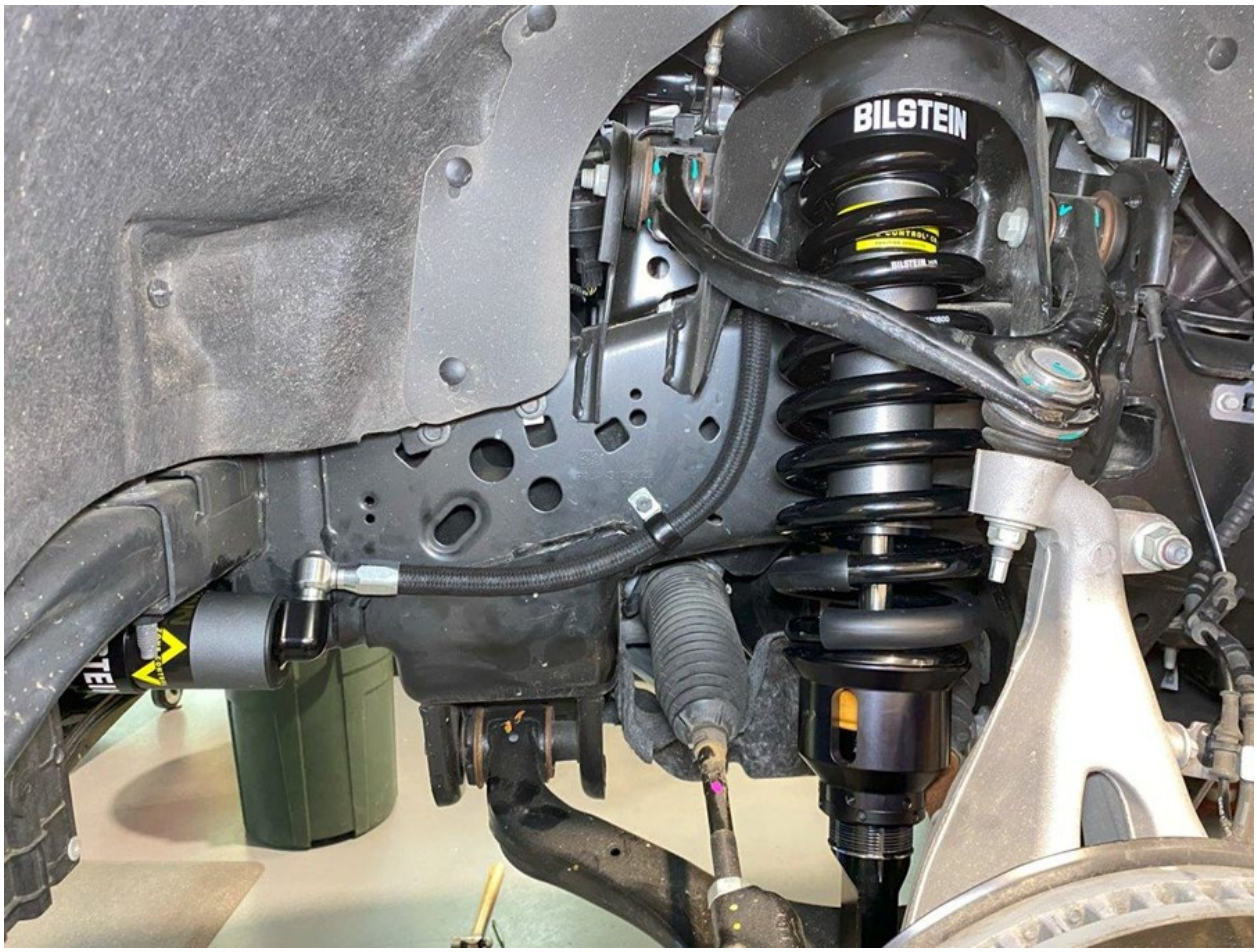

Final right front (passenger) 41-326725 B8 8112 shock installed on vehicle:

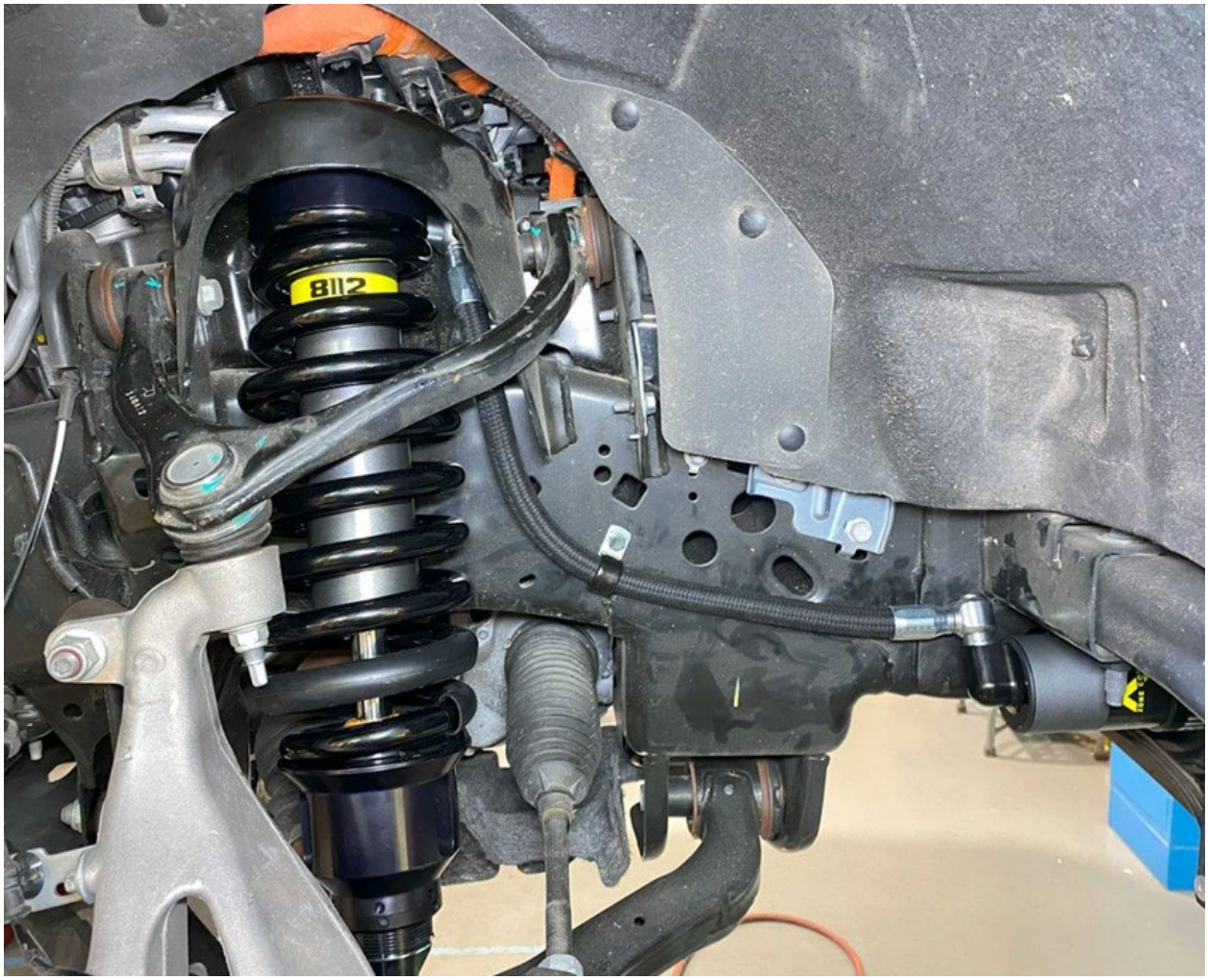

Final left front (driver) 41-326695 B8 8112 DSA+ shock installed on vehicle:



Final right front (passenger) 41-326718 B8 8112 DSA+ shock installed on vehicle:



Dual Speed Reservoir Adjustment

DSA+ dampers come equipped with independent high and low speed compression damping adjusters located on the reservoir. The high speed is the blue knob and is labeled as such, and the low speed is the gold knob and is labeled as such. The **FULL FIRM** setting for each adjuster knob is achieved when the knob is turned all the way **CLOCKWISE.** The **FULL SOFT** setting for each adjuster knob is achieved when the knob is turned all the way **COUNTER-CLOCKWISE.** To make high or low speed adjustments, simply turn each knob individually until the desired level of control is achieved. To stiffen the ride, turn the knobs clockwise. To soften the ride, turn the knobs counter-clockwise.

The factory setting of these adjusters are as follows:

- High Speed (blue knob) – 6 clicks counter-clockwise from fully firm.
  (10 total settings are available which translates to 9 clicks; 1 rotation)
- Low Speed (gold knob) – 13 clicks counter-clockwise from fully firm.
  (20 total settings are available which translates to 19 clicks; 2 rotations)

Please note: It's normal for the high speed (blue) knob to become significantly more difficult to turn when progressing to the firmer end of the adjustment range; particularly during the last 3 to 4 settings/clicks. This increased difficulty is a result of the increasing preload of the high speed valve stack shims. To aid in ease of adjustment at the firmest end of the high speed range, it's optional to use the included Bilstein wrench part # E-XS01-0000004. Additionally, it's normal for the clicks on the high speed (blue) knob to become less pronounced at the firmer end of the adjustment range.



Dual Speed Reservoir Adjuster

Zone Control JCO (Jounce Cut-off) Adjustment

DSA+ dampers also come equipped with an adjuster for the JCO (jounce cut-off) system. This blue adjuster knob is located on the mount cap above the coil spring. The **FULL FIRM** setting for the adjuster knob is achieved when the knob is turned all the way **CLOCKWISE.** The **FULL SOFT** setting for the adjuster knob is achieved when the knob is turned all the way **COUNTER-CLOCKWISE.** To make JCO adjustments, simply turn the adjuster knob clockwise for more bottom out control and counter-clockwise for less bottom out control. The adjustment will not affect the ride quality when the vehicle is in the main damping zone at regular ride height.

The JCO adjuster factory setting is:

- 6 clicks counter-clockwise from fully firm.
  (10 total settings are available which translates to 9 clicks; 1 rotation)



JCO (Jounce Cut-off) Adjuster