COGNITO
34935 Flyover Ct. Bakersfield, CA 93308
Phone: (661) 588-8085 | Fax: (661) 588-8295

INSTALL INSTRUCTIONS:
2011-2019 GM 2500-3500HD Limited Dynamic Geometry Boxed Traction Bar Kit for 6"-9" Rear Lift Height
SKU: 110-90459



PARTS LIST FOR SKU: 110-90459

QTY.	PART #	DESCRIPTION
2	**8701**	**43" Boxed Sheet Metal Traction Bar**
1	8535	11-19 GM Frame Mount Bracket 6-9" Driver Side
1	8536	11-19 GM Frame Mount Bracket 6-9" Passenger Side
1	8537	11-19 GM Traction Bar Nut Plate Driver Side
1	8533	11-19 GM Traction Bar Nut Plate Passenger Side
2	8531	11-19 GM Leaf Spring Axle Bracket
4	8460	6" Traction Bar Shackle
1	**HP9205**	**GM Traction Bar Hardware Kit**
1	**HP9132**	**Cushion Clamp Hardware Pack**
1	**HP9214**	**Traction Bar Bushing Kit**

HP9205 – GM Traction Bar Hardware Kit

QTY.	PART #	DESCRIPTION
2	6079G	Black Polyurethane Bump-Stop
2	-	Socket Head Cap Screw 3/8-16 UNC x 1.00 Long
4	-	Cap Screw 1/2-13 UNC x 1.25 Long
4	-	Cap Screw 1/2-13 UNC x 2.25 Long
2	-	Cap Screw 9/16-12 UNC x 4.00 Long
2	-	Cap Screw 9/16-12 UNC x 5.00 Long
2	-	3/8" SAE Flat Washer
12	-	1/2" SAE Flat Washer
8	-	9/16" SAE Flat Washer
4	-	1/2" Lock Washer
2	-	3/8-16 UNC Lock Nut
4	-	1/2-13 UNC Lock Nut
4	-	9/16-12 UNC Lock Nut

8532 – 41" Boxed Sheet Metal Traction Bar

QTY.	PART #	DESCRIPTION
2	6208	Giro Bushing
2	6227	1-1/4-12 UNF Forged Rod End
2	6229	Traction Bar Adjuster Nut
4	-	Socket Head Cap Screw 3/8-16 UNC x 1.25 Long
4		3/8" Steel Split Lock Washer

HP9132 – Cushion Clamp Hardware Kit

QTY.	PART #	DESCRIPTION
4	-	Cap Screw 1/4-20 UNC x .75 Long
8	-	1/4 SAE Flat Washer
4	-	1/4-20 UNC Lock Nut
4	-	1/2" Wire/Tube P-Clamp
4	-	6" Black Cable Tie

HP9214 - Traction Bar Bushing Kit

QTY.	PART #	DESCRIPTION
8	2581.01-MOD	Black Polyurethane Bushing
4	2509.1	Black Polyurethane Spring Bushing
4	5036	.75 x 1.035 x .50 Crush Sleeve
2	5045	1.00 x .219 x 3.27 Crush Sleeve

WARNING

Please read this entire instruction sheet before beginning installation. Proper installation of these components requires a qualified mechanic. Always wear safety glasses when using power tools, and take appropriate precautions when working under a vehicle. If these instructions are not properly followed you may jeopardize your, and your passenger's safety, and severe frame, suspension or tire damage may also result from improper installation.

INTRODUCTION

Traditionally traction bars have a fixed length and fixed front pivot point. The nature of a leaf spring is to bend in order to do its job of carrying vertical load. When the spring is bending, the distance between the fixed front pivot bolt of the spring, and the axle housing, changes through the suspension cycle because the leaf spring is bending to do its job. A fixed length traction bar coupled with a leaf spring that is changing length causes binding as the axle travels in the suspension cycle. The Cognito Limited Dynamic Geometry traction bar kit allows the length of the traction bar and shackle assembly to vary with the leaf spring through the suspension cycle under normal operating conditions, without binding via the use of the shackle. The length of the traction bar assembly at its longest position, which is when the shackle is lined up with the traction bar, is used to control axle wrap and wheel hop that can happen when high torque loads are applied by heavy acceleration and/or heavy weight loads.

TECH NOTES

- It is necessary to raise the vehicle to perform installation of these products. A hoist or installation bay is recommended. Always ensure the truck is properly supported before attempting installation as serious injury could occur.
- This application is for stock and lifted applications.
- Torque bolts to the torque specification chart on page 13.

REQUIREMENTS

- Installation requires a qualified mechanic.
- Read instructions carefully and study the pictures before attempting installation.
- Check the parts and any hardware packages against the parts list to assure that your kit is complete.

INSTALLATION

Figure 1: Remove Brake Cable Bracket



Figure 2: Fuel Tank Shield



1. On the driver side of the vehicle, remove the brake cable bracket to allow the brake cables to hang freely (Figure 1). Then remove the plastic fuel tank shield by removing the (3) bolts along the driver side frame rail (Figure 2), this will need to be trimmed later in these instructions.

Figure 3: Mount Frame Mount Bracket



2. Before starting step 2, raise the vehicle or support rear end housing at a position so the leaf spring is free of tension. Remove the front leaf spring bolt and align the 11-19 GM Frame Mount Bracket 6-9" Driver Side (Part # 8535) to pinch the frame mount bracket between the frame and bolt head with brake cables passing through the center of the bracket (Figure 3). Replace the leaf spring bolt to snug, but do not tighten at this time.

Figure 4: Frame Mount Bracket Location



Figure 5: Frame Mount Bracket Location



3. Rotate the frame mount bracket forward until the front mounting pad sits on the frame rail (Figure 4). Now, mark the location of the front mounting holes using a center transfer punch (Figure 5).

Figure 6: Frame Mount Hole Locations



Figure 7: Drill Frame Mount Holes



4. Remove the frame mount bracket to expose both marked hole locations (Figure 6). Using a 1/2" drill bit, drill through the bottom side of frame rail at both marked hole locations (Figure 7). Repeat steps 2-3 to re-install the frame mount bracket.

Figure 8: Nut Plate (Driver Side)

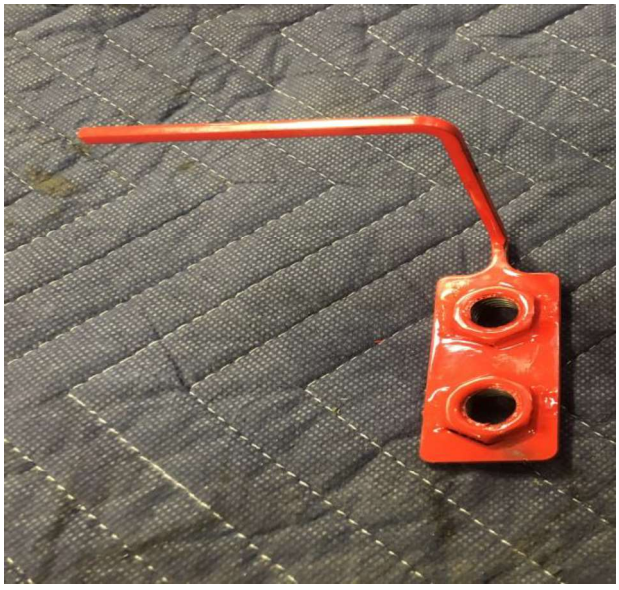

Figure 9: Nut Plate Window



5. Locate the 11-19 GM Traction Bar Nut Plate Driver Side (Part # 8537) shown in (Figure 8) and the window above the front frame mount (Figure 9).

Figure 10: Insert Nut Plate



Figure 11: Install Front Frame Mount Hardware



6. Insert the nut plate through the window in the frame rail (Figure 10). Rotate and orientate the nut plate so that the nuts are aligned with the 1/2” through holes completed in step 4. Use the items listed below to install with the 1/2” lock washer between the bolt head and 1/2" flat washer (Figure 11). Tighten both 1/2-13 UNC bolts and leaf spring pivot bolt to 90 ft.-lbs.

   - (2) - Cap Screw 1/2-13 UNC x 1.25 Long
   - (2) - 1/2” Lock Washer
   - (2) - 1/2" SAE Flat Washer

Figure 12: Fuel Tank Shield Trim



Figure 13: Fuel Tank Shield Trimmed



7. The fuel tank shield, removed in step 1, will need to be trimmed to a similar profile on the frame rail mounting flange (Figure 12). Once the flange has been trimmed to clear the frame mount bracket mounting pad, re-install the fuel tank shield (Figure 13).

Figure 14: Traction Bar Shackle Parts



8. Locate the following parts (Figure 14).

   - (2) - Traction Bar Shackle (Part # 8460)
   - (4) - Traction Bar Shackle Bushing (Part # 2581.01-MOD)
   - (2) – Traction Bar Shackle Crush Sleeve (Part # 5036)

Figure 15: Install Shackle Bushings



Figure 16: Grease Shackle Bushings

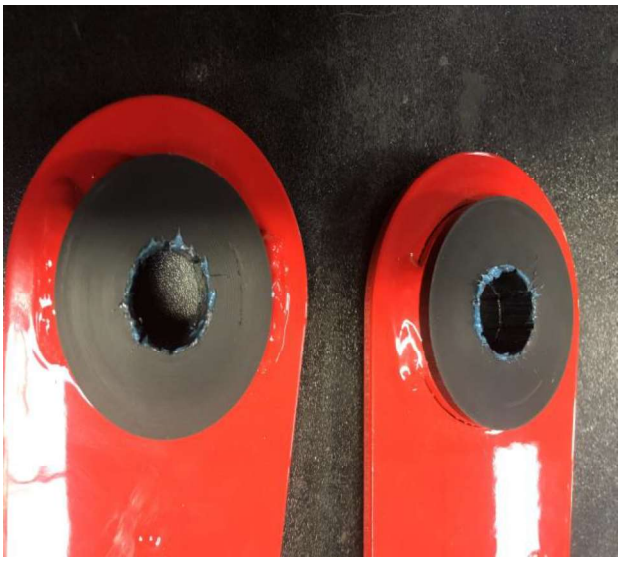

9. Install (2) shackle bushings per shackle from each side (Figure 15). A light lubricant, WD-40, may be used to install but do not grease the outside of the bushing. Once the bushings are installed in shackles, then grease the inside bore of each bushing (Figure 16).

Figure 17: Install Shackle Crush Sleeves



Figure 18: Shackle Assembly



10. Install the crush sleeve by using a press or rubber mallet (Figure 17). Once installed, the crush sleeve should be flush with the bushing faces on both sides of the shackle (Figure 18).

Figure 19: Assemble Shackles to Frame Mount



Figure 20: Shackle Assembly



11. Install the assembled shackle by inserting the shackle bushings into the frame bracket pivot pocket (Figure 19). Using the hardware listed below, assemble the shackles to the frame bracket (Figure 20), but do not tighten bolts at this time.
    - (2) - Cap Screw 1/2-13 UNC x 2.25 Long
    - (4) - 1/2" SAE Flat Washer
    - (2) - 1/2-13 UNC Lock Nut
    - (2) - 6" Traction Bar Shackle (Assembled)

Figure 21: Route Brake Cables



Figure 22: Brake Cable Ties



12. Route the brake cables with the left rear wheel brake cable closest to driver side of frame mount bracket. Using the hardware listed below, securely install the cables as shown (Figure 21). Use the 6” cable ties to secure brake cables to prevent any wearing on leaf spring or traction bar (Figure 22).

    - (4) - Cap Screw 1/420 UNC x .75 Long
    - (8) - 1/4" SAE Flat Washer
    - (4) - 1/4-20 UNC Lock Nut
    - (4) - 1/2” Wire/Tube P-Clamp
    - (4) - 6” Black Cable Tie

Figure 23: Bump-stop Mounted



Figure 24: Bump-stop Mounting



13. Using the hardware listed below, mount the bump-stop the frame mount bracket (Figure 23). Do not over-tighten the bump-stop, only tighten the nut until the bump-stop is firmly held in place (Figure 24).

    - (1) - Black Polyurethane Bump-Stop (Part #6079G)
    - (1) - Socket Head Cap Screw 3/8-16 UNC X 1.00 Long
    - (1) - SAE 3/8” Flat Washer
    - (1) - 3/8-16 UNC Lock Nut.

Figure 25: Remove U-Bolt Nuts



Figure 26: Install Axle Mount Bracket

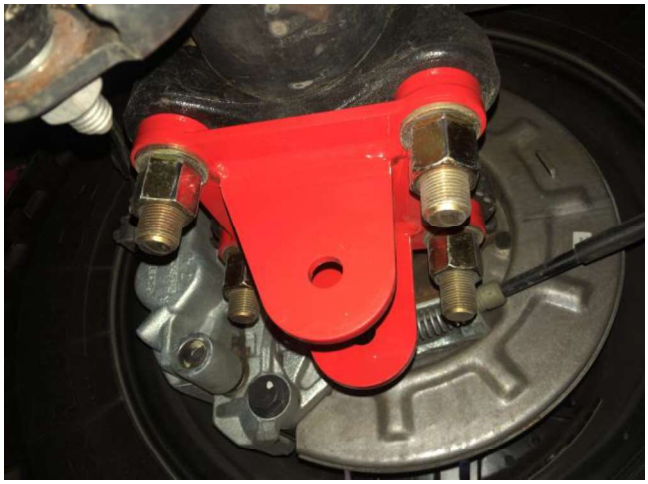

14. For this step, the vehicle will need to be lowered down to the ground. Once vehicle is on the ground at normal operating position, remove U-bolt nuts from the driver side leaf spring bracket (Figure 25). Install the 11-19 GM Leaf Spring Axle Bracket (Part # 8531) by sliding over the U-Bolts with traction bar mounting eyelets offset toward the front of the vehicle as shown (Figure 26). Replace the U-bolt nuts and tighten to 170 ft. /lbs.

Figure 27: Traction Bar Bushing Parts

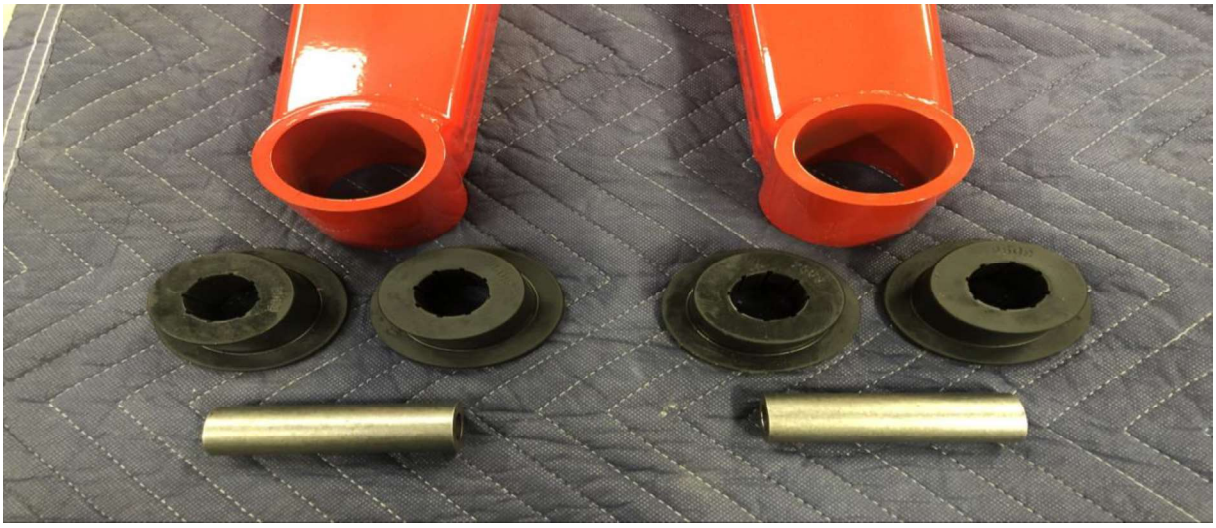

15. Locate the following parts (Figure 27).
    - (2) - 41” Boxed sheet metal traction bar (Part # 8532)
    - (4) - Traction bar poly bushing (Part # 2509.1)
    - (2) - Traction bar crush sleeve (Part # 5045)

Figure 28: Traction Bar Bushings Installed



Figure 29: Traction Bar Bushings Greased

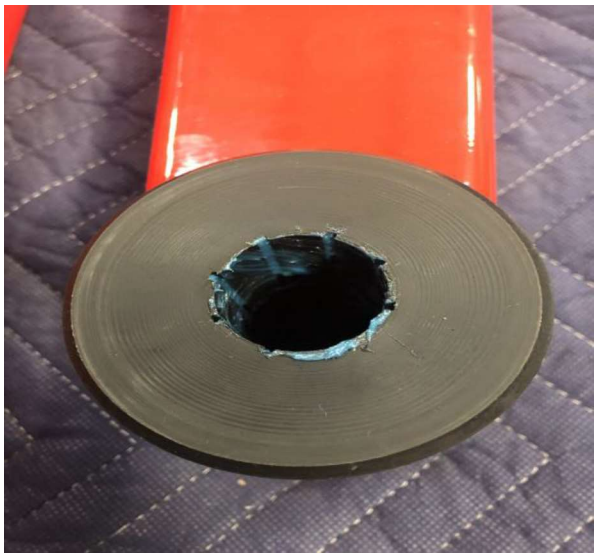

16. Install (2) traction bar bushings per traction bar from each side (Figure 28). A light lubricant, WD-40, may be used to install but do not grease the outside of the bushing. Once bushings are installed in traction bars, grease the inside bore of each bushing (Figure 29).

Figure 30: Traction Bar Assembled



Figure 31: Traction Bar Assembled



17. Install the traction bar crush sleeve by using a press or rubber mallet (Figure 30). Once installed, the crush sleeve should be flush with the bushing faces on both sides of the traction bar (Figure 31).

Figure 32: Traction Bar / Shackle Pivot



18. Insert the traction bar end with bushings between the driver side shackles and install using the hardware listed below (Figure 32). Now tighten the shackle pivot bolts in the frame mount bracket assembly and traction bar pivot bolt to 120 ft. /lbs.

    - (1) - Cap Screw 9/16-12 UNC x 5.00 Long
    - (2) – 9/16" SAE Flat Washer
    - (2) – 9/16-12 UNC Lock Nut

Figure 33: Traction Bar Rod End



19. Prior to installing the traction bar rod end, make sure that the rod end and adjuster sleeve are threaded all the way into the traction bar tube (Figure 33).

Figure 34: Traction Bar Rod End / Rear Axle Pivot



Figure 35: Traction Bar Rod End / Rear Axle Pivot



20. Insert the traction bar rod end between the eyelets on the rear axle mount. Turning the adjuster sleeve only, lengthen the traction bar tube until the rod end lines up with holes in the traction bar mounting eyelets. Install using the hardware listed below and tighten to 120 ft. /lbs. (Figure 34 & 35).

    - (1) - Cap Screw 9/16-12 UNC x 4.00 Long
    - (2) – 9/16" SAE Flat Washer
    - (2) – 9/16-12 UNC Lock Nut

Figure 36: Traction Bar Length Adjustment



Figure 37: Adjuster Nut Clamp



21. Once the traction bars have been installed, ensure that all hardware has been tightened to the specified torque specifications. Allow the vehicle to rest at ride height. Adjust the length of the traction bar by turning the adjustment sleeve. (Figure 36). Lengthen the bar until the adjuster gets tight or hard to turn freely, which happens when the traction bar is at its maximum length. Then shorten, (turn in opposite direction), by a 1/4 of revolution of the adjuster. With the traction bar length set, tighten the 3/8" socket head cap screws to 40 ft. /lbs. to lock the adjuster in place (Figure 37). **After completing these steps, the traction bar should form a very small angle with the shackle.** (Figure 39)

Figure 38: Do not exceed maximum distance.

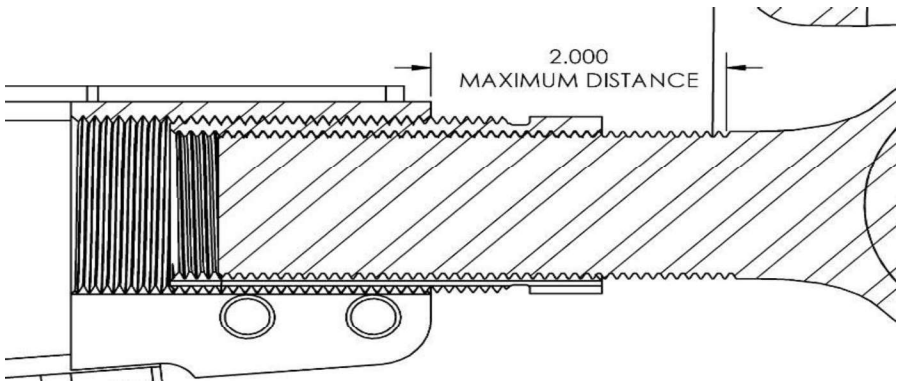

Figure 39: Correctly Adjusted Traction Bars



22. Repeat these steps for the mounting and installation of the passenger side traction bar and mounts. The passenger side will not require any trimming of fuel tank shield or brake cable routing.

Torque Specification Chart

3/8”-16 UNC SHCS torque to 40 ft. /lbs.
1/2-13 UNC Torque to 90 ft. /lbs.
9/16-12 UNC Torque to 120 ft. /lbs.
5/8” U-Bolt nuts 170 ft. /lbs.
(Do not use Torque spec chart for bump-stop)

WARRANTY / RETURN POLICY / SAFETY

Cognito Limited Lifetime Warranty

Cognito Motorsports, Inc. hereinafter "Cognito," warrants to the original retail purchaser, that its suspension products are free from workmanship and material defects for as long as the purchaser owns the vehicle on which the product(s) were originally installed. This warranty will be void if any modifications are made to the components, including alterations to the surface finish, i.e.; painting, powder coating, plating, and/or welding, or if they are improperly installed. Cognito truck suspension products are not designed nor intended to be installed on "competition" vehicles used in race applications, stunt or for exhibition purposes that are outside of the intended operating conditions specified by the manufacturer. Racing and competition are defined as any contests between two or more vehicles; or vehicles competing individually on off road circuits in timed events (whether or not such contests are for an award or prize).

This warranty does not include coverage for police, taxi, government or commercial vehicles, and the warranty does not cover Cognito products sold outside of the USA. Cognito's obligations under this warranty are specified and applied at its sole discretion, and warranty coverage is limited to repair or replacement of the defective product(s). Any and all costs of removal, installation or reinstallation; freight charges, incidental or consequential damages associated with the covered products are expressly excluded from this warranty.

The following items are exempt from Cognito limited warranty coverage: bushings, bump stops, tie-rod ends (Heim joints) and limiting straps. These parts are "consumables" and designed to wear as a normal part of their duty cycle, therefore they are not considered defective when worn. The aforementioned products are warrantied separately against defects in workmanship, for 60 days from the date of purchase. As a condition of warranty validation, respective Cognito suspension components must be installed as a complete system (not combined with non-Cognito hardware or ancillary parts). Any substitutions or omission of required components will void the warranty. Some minor cosmetic wear and imperfections may occur to parts during shipping, which is not covered under this warranty. This limited warranty does not apply to any components that have been subjected to collision damage, negligence, alteration, abuse, or misuse, and coverage does not extend to products manufactured by third-party companies. Cognito reserves the right to supersede, discontinue, or change the design, finish, part number and/or application of its parts when deemed necessary, without notice.

Return Policy

Product returns will not be accepted without prior written approval from an authorized Cognito representative. All products being returned must be shipped via trackable, prepaid freight. Returned products are subject to a 25% percent restocking fee. The eligible return period for products purchased directly from Cognito is 30 days from the verified date when the product(s) were originally received by the purchaser.

Product Safety Advisory

The installation of Cognito steering and suspension components will modify your vehicle's original factory equipment and geometry, which may cause it to handle differently than a stock (unaltered) vehicle. Installation of these components is not intended to strengthen nor reinforce the vehicle's frame, nor are they designed to increase rollover protection. It is necessary to periodically inspect all suspension and drive train components for proper attachment, torque specifications, operation, and for any potential unusual wear or damage. Installation of these parts will modify the height of the vehicle and may raise the center of gravity. Modifying vehicle height combined with off road operation may increase your vehicle's susceptibility to rollover conditions, which may cause serious injury or death. Many states regulate allowable vehicle height modifications, and it is your responsibility to know and comply with the legal requirements specified by the laws where you reside. Modifications to your vehicle's ride height may also affect the ride quality, driver input response, trackability and handling, and wear to your vehicle's suspension components and tires.