INSTALLATION INSTRUCTIONS

2011-19 GM C/K2500HD & C/K3500HD 3.5” ULTIMATE SYSTEM w/ UNIBALL UPPER CONTROL ARMS

FTS21129

Fabtech Motorsports | 4331 Eucalyptus Ave. Chino, CA 91710

Tech Line: 909-597-7800 | **Fax:** 909-597-7185 | **Web:** www.fabtechmotorsports.com

- PARTS LIST -

	FTS21130	3.5" SYSTEM W/ PERFORMANCE SHOCKS
1	FTS21129	SYSTEM W/O REAR BLOCKS
2	FTS7341	PERFORMANCE SHOCK
2	FTS7299	PERFORMANCE SHOCK

	FTS21188	3.5" SYSTEM W/ STEALTH SHOCKS
1	FTS21129	SYSTEM W/O REAR BLOCKS
2	FTS6019	STEALTH SHOCK
2	FTS6341	STEALTH SHOCK

	FTS21202	3.5" SYSTEM W/ DIRT LOGIC SHOCKS
1	FTS21129	SYSTEM W/O REAR BLOCKS
2	FTS810932	DIRT LOGIC 2.25 NON RESI BLACK FRONT
2	FTS810942	DIRT LOGIC 2.25 NON RESI BLACK REAR

	FT20539	HARDWARE KIT
1	FTLOCK	THREAD LOCKING COMPOUND 1 MIL
2	FTCLAMP	CLAMP 3/8X1/2W .26THK NEOPRENE
2	FTCLAMP10	ADEL CLAMP #10
4	25200751052	SCREW 1/4-20 X 3/4 HEX G5 Z1
4	FT84	GREASE FITTING 1/4-28

	FT90121	HARDWARE KIT
2	56180004152	9/16" -18 C-LOCK NUT
2	56000005052	9/16 SAE WASHER G5 ZINC
2	75160004152	3/4-16 C-LOCK NUT ZINC

	FTS21129	3.5” SYSTEM W/O REAR BLOCKS
1	FTS20503D	SPINDLE (DRIVER)
1	FTS20503P	SPINDLE (PASSENGER)
1	FT20575BK	UCA (DRIVER)
1	FT20576BK	UCA (PASSENGER)
2	FT20550	TORSION KEY
1	FT20539	HARDWARE KIT
1	FT20588	HARDWARE SUBASSEMBLY

	FT20588	HARDWARE SUBASSEMBLY
1	FT90111	BUSHING KIT
1	FTREGCARD	REGISTRATION CARD
4	FT147	MISALIGNMENT
2	FT20579	UNIBALL SPACER
2	FT94500	UNIBALL ADAPTER PIN
4	12008007100	8” Zip Tie
1	FT90121	HARDWARE KIT
1	FTREGCARD	REGISTRATION CARD
1	FTAS16	DRIVER WARNING DECAL
2	FT21129I	INSTRUCTIONS

	FT90111	BUSHING KIT
8	FT1038	BUSHING BLACK URETHANE
4	FT77	SLEEVE 1.000 X .630 X 2.620
1	FTLUBE	URETHANE LUBE 1 PACKET

- TOOL LIST -

Required Tools (Not Included)

Basic Hand Tools
Floor Jack
Jack Stands
Assorted Metric and S.A.E sockets, and Allen wrenches
Torque Wrench
Torsion Bar Removal Tool

- PRE-INSTALLATION NOTES -

Read this before you begin installation-

Check all parts to the parts list above before beginning installation. If any parts are missing contact Fabtech at 909-597-7800 and a replacement part will be sent to you immediately.

Read all instructions thoroughly from start to finish before beginning the installation. If these instructions are not properly followed severe frame, driveline and / or suspension damage may occur.

Check your local city and state laws prior to the installation of this system for legality. Do not install if not legal in your area.

Prior to the installation of this suspension system perform a front end alignment and record. Do not install this system if the vehicle alignment is not within factory specifications. Check for frame and suspension damage prior to installation.

The installation of this suspension system should be performed by two professional mechanics.

Use the provided thread locking compound on all hardware.

Do not combine this suspension system with any other lift device or parts.

This suspension must be installed with Fabtech shock absorbers.

WARNING- Installation of this system will alter the center of gravity of the vehicle and may increase roll over as compared to stock.

For technical assistance call: 909-597-7800 or e-mail: info@fabtechmotorsports.com

Vehicles that receive oversized tires should check ball joints, uniballs, tie rods ends, pitman arm and idler arm every 2500-5000 miles for wear and replace as needed.

Verify differential fluid is at manufactures recommended level prior to kit installation. Installation of the kit will reposition the differential and the fill plug hole may be in a different position. (For example, if the manufacture recommends 3 quarts of fluid, make sure the diff has 3 quarts of fluid). Check your specific manual for correct amount of fluid.

Due to variances, some vehicles may not sit level. To achieve more lift in the rear please order the following block and ubolt kit:
- FTS21110 (2500HD)
- FTS21111 (3500HD)

FOOTNOTES:
- Cannot use OEM wheel and tire.
- Will not fit standard cab models.
- Requires cutting of fenderwell sheet metal for use with 35” tires.
- Does not fit GMC AT4 or Chevy Trail Boss models

Recommend Tires and Wheels:

Use 33/12.50R18 tire w/ 18x9 wheels w/ 5 3/4” BS w/ minor trimming
Use 33/12.50R20 tire w/ 20x9 wheels w/ 5 3/4” BS w/ minor trimming
Use 35/13.50R18 tire w/ 18x9 wheels w/ 5 3/4” BS w/ fenderwell cutting
Use 35/13.50R20 tire w/ 20x9 wheels w/ 5 3/4” BS w/ fenderwell cutting

- INSTRUCTIONS -

FRONT SUSPENSION

1. Disconnect the negative terminal on the battery. Jack up the front end of the truck and support the frame rails with jack stands. **NEVER WORK UNDER AN UNSUPPORTED VEHICLE!** Remove the front tires.

2. Locate the torsion bar adjusting keys and threaded bolts. Measure exposed threads of torsion bar adjusting bolts and record for reinstallation. Mark torsion bars indicating driver and passenger. Using a torsion bar removal tool, unload the torsion bars and remove the crossmember and bars. Retain the hardware for reinstallation. NOTE- Do not attempt to unload or remove torsion bars without the proper torsion bar tool. Torsion Bars are under extreme spring load.

3. Remove the sway bar link ends from the lower control arm.

4. Beginning on the driver's side, disconnect the tie rod end from the steering knuckle by striking the knuckle to dislodge the tie rod end. **SEE FIGURE 1**

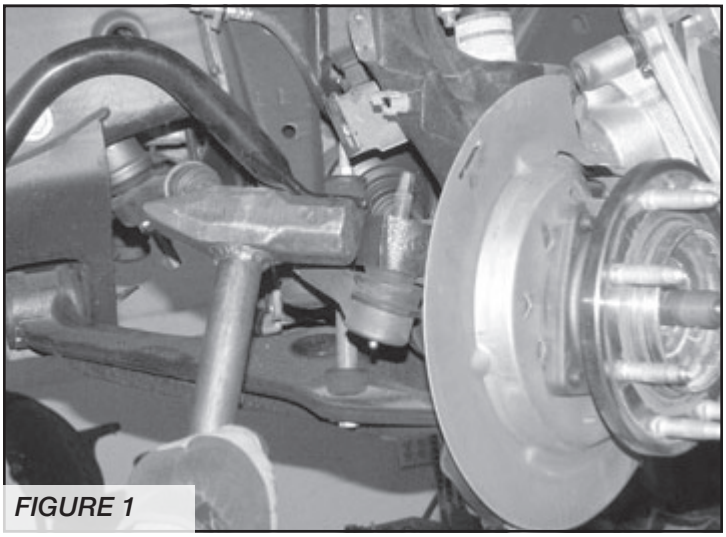

FIGURE 1

5. Remove the brake hose bracket from the top of the steering knuckle. Remove the caliper from the rotor and place above the upper control arm during this portion of the installation. Remove brake rotor from the steering knuckle. Unbolt the wheel speed sensor connection from the hub and control arm. **SEE FIGURE 2**

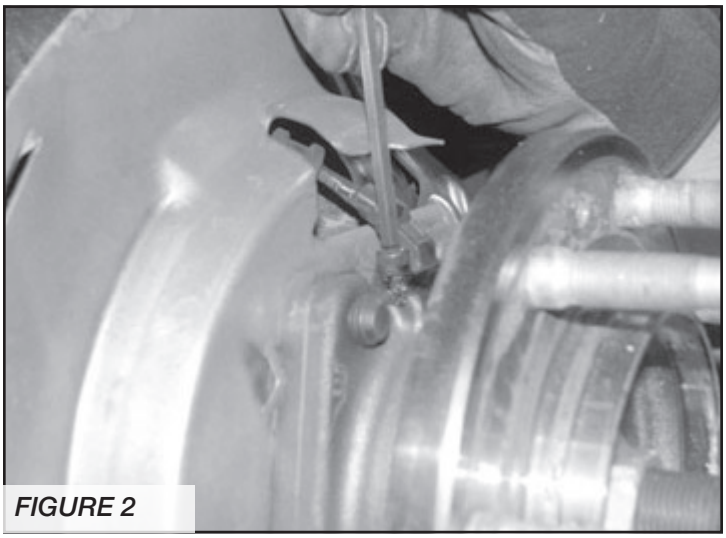

FIGURE 2

6. Remove axle nut, washer and the 4 hub bolts on backside of knuckle. Remove bearing hub assembly including O-ring from knuckle. Retain parts and hardware for reinstallation.

7. Remove the upper and lower ball joint nuts. Disconnect the upper and lower ball joints from the steering knuckle by striking the knuckle with a large hammer next to each ball joint on the knuckle to dislodge the ball joints. Use care not to hit the ball joints when removing. Retain nuts and discard knuckle. **SEE FIGURE 3**

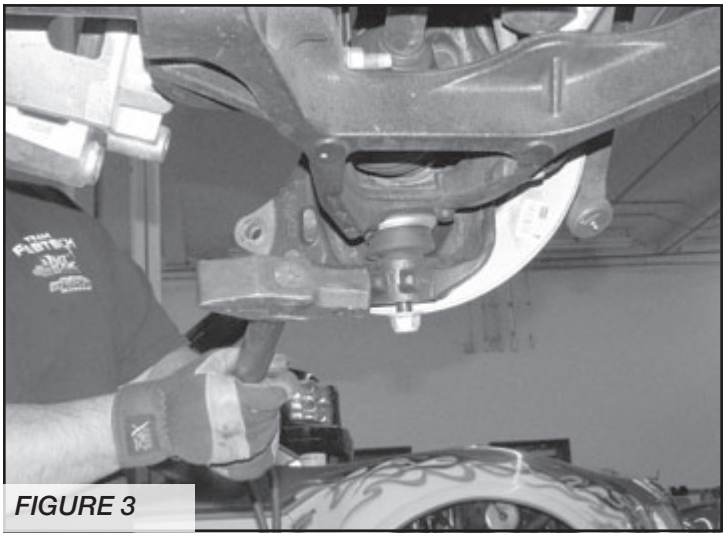

FIGURE 3

8. Mark the location of the alignment cams on the frame of the upper control arm pocket. Remove the upper control arm. Retain the factory hardware. **SEE FIGURE 4**

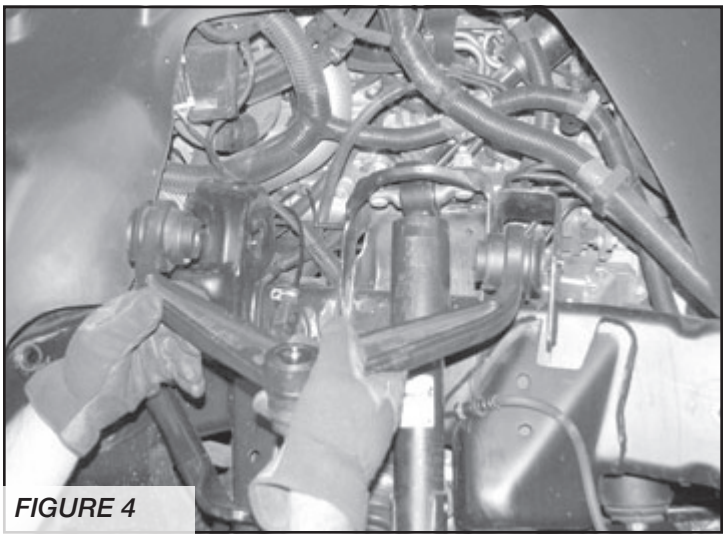

FIGURE 4

9. Remove the factory shock and discard.

10. Locate the FTS7341 shock and install using the factory lower hardware. Torque the upper bar pin bolts to 60 ft-lbs and the lower to 129 ft-lbs.

11. If installing Dirt Logic shocks, install the upper shock mount (FT20484) into the factory upper shock tower using the using two 9/16”-12 x 1-1/4”, washers and lock nuts.. **SEE FIGURE 5**

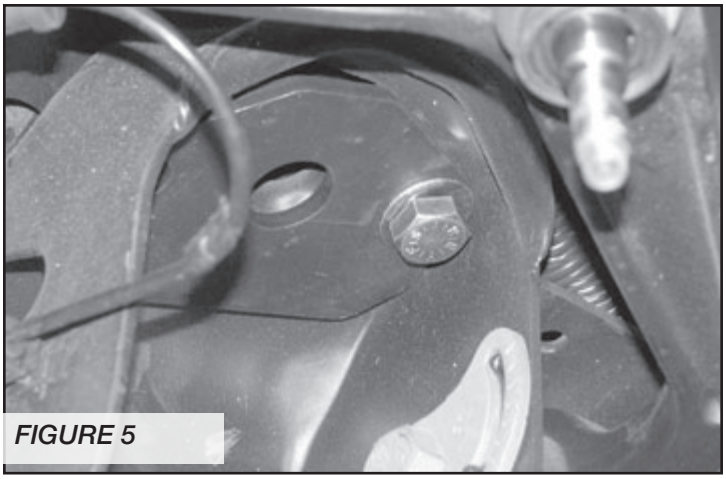

FIGURE 5

12. Install the front shock (FTS810932) with the stem in the upper mount.

13. Locate the Fabtech driver’s side control arm FT20575BK, four bushings FT1038, two grease zerks FT84 and two sleeves FT77.

14. Install all these components in the control arm barrels. **SEE FIGURES 6-7**

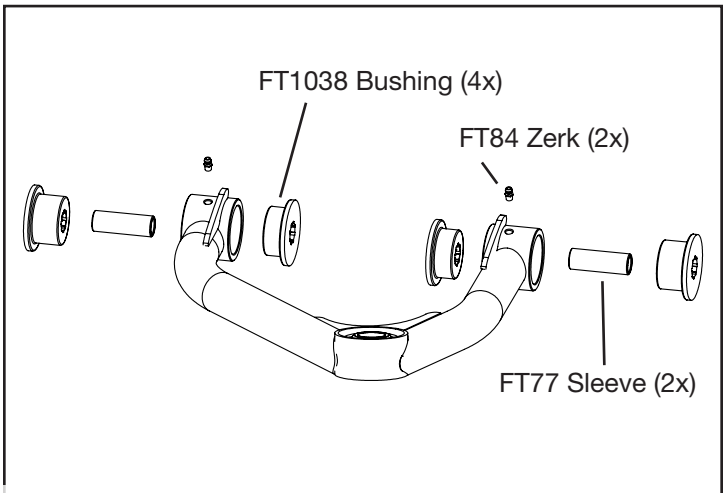

FIGURE 6

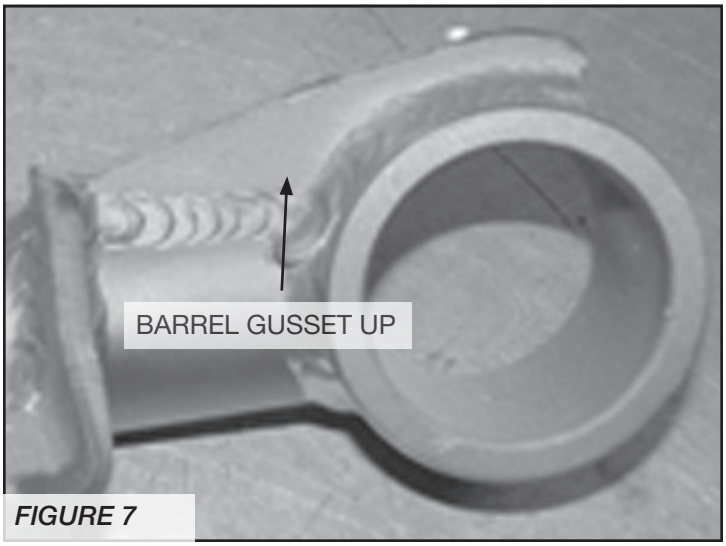

FIGURE 7

15. Install the new Fabtech upper control arm in the factory upper control arm pockets using the factory hardware at the previously marked alignment cam location. When installing the arm on the truck, make sure the barrel gussets are up. Torque to 150 ft- lbs and lube zerks with grease.

16. Locate the new Fabtech driver side spindle FTS20503D. Locate the o-ring, dust shield and hub. Clearance dust shield as necessary. Install onto the Fabtech spindle. Torque the factory hub bolts to 184 ft-lbs.
SEE FIGURES 8-10

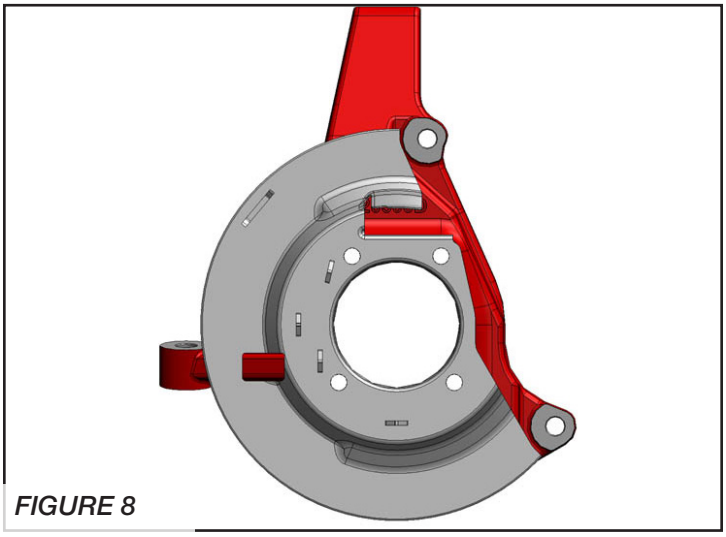

FIGURE 8

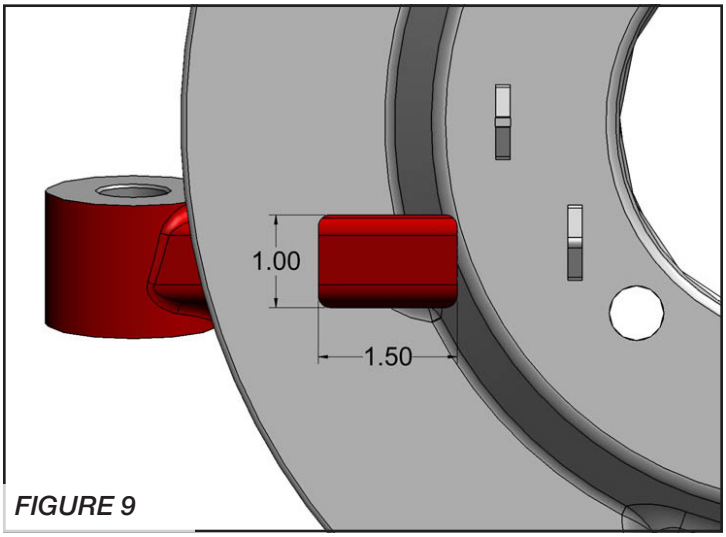

FIGURE 9

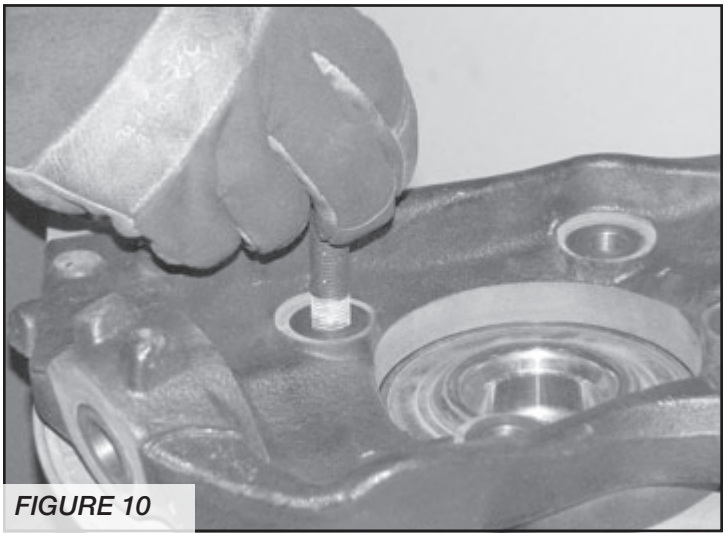

FIGURE 10

17. Install the Fabtech knuckle onto the lower ball joint. Pull the CV shaft back through the Hub. Torque the lower ball joint to 100 ft-lbs.

18. Locate FT94500 Uniball adapter pin and two FT147 uniball misalignment spacers.

SEE FIGURE 11 FOR STEPS 19-24

19. Insert the uniball pin into the factory knuckle upper ball joint taper. Install the 9/16”-18 lock nut with thread lock compound and flat washer onto the bottom side of the pin. This will lock the pin into the knuckle. Torque to 150 ft-lbs.

20. Install one FT20579 uniball spacer onto the uniball pin mounted in the knuckle with the large side toward the knuckle.

21. Install one FT147 uniball misalignment spacer onto the pin.

22. Swing the control arm down, slide the pin into the uniball on the control arm seating the lower FT147 spacer in the control arm.

23. Install the upper FT147 uniball misalignment spacer onto the pin.

24. Install the 3/4” -16 lock nut on the top side of the pin with thread lock compound and torque to 150 ft-lbs.

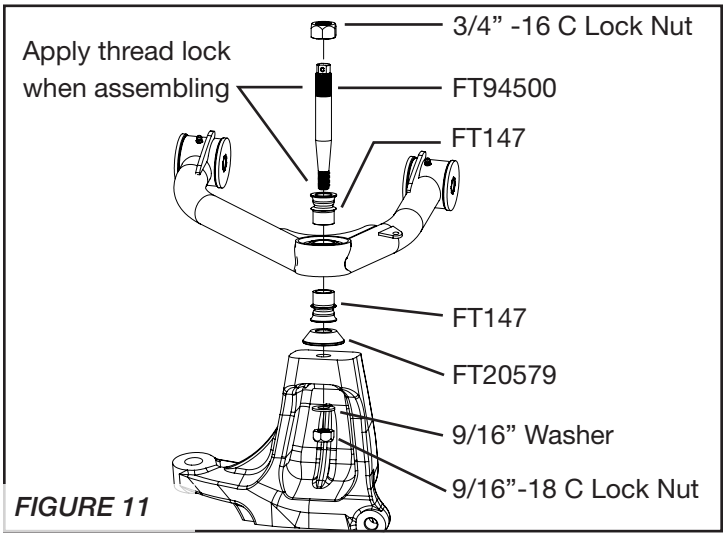

FIGURE 11

25. Install the axle nut and torque to 165 ft-lbs. Replace axle nut cover. **SEE FIGURE 12**

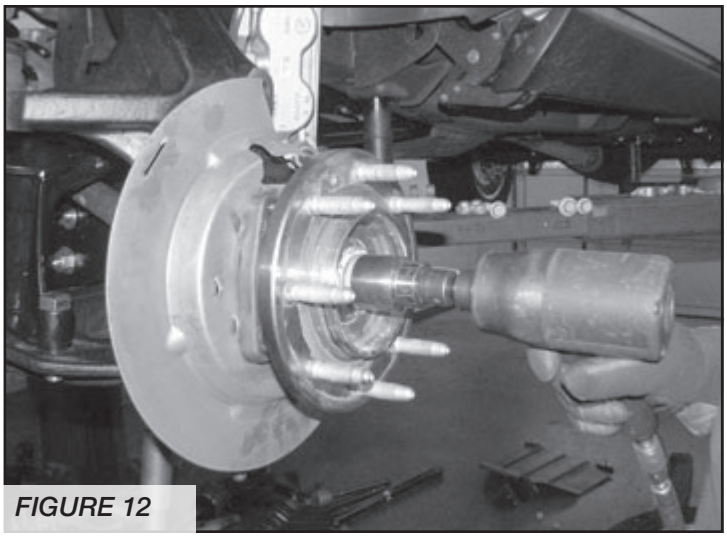

FIGURE 12

26. Install the wheel speed sensor into the factory hub. **SEE FIGURE 13**

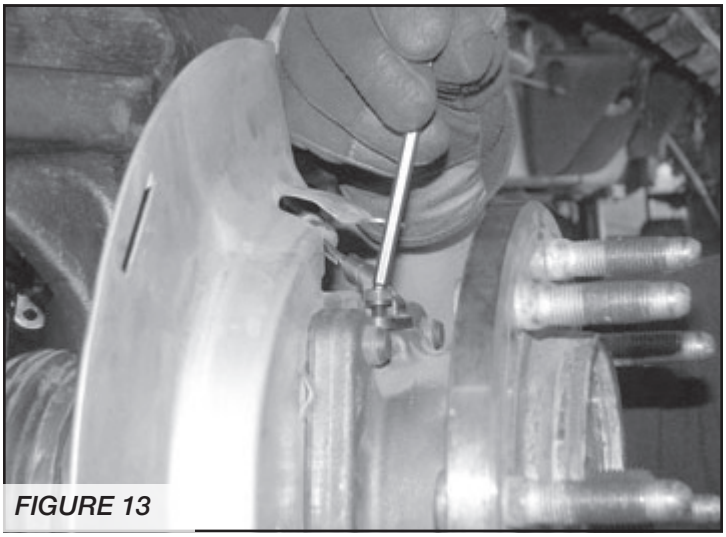

FIGURE 13

27. Install the factory tie rod end into the Fabtech spindle and torque to 120 ft-lbs.

28. Install the rotor and the small bolt retaining the rotor and torque to 12 ft-lbs. Install the caliper and torque to 220 ft-lbs. **SEE FIGURE 14**

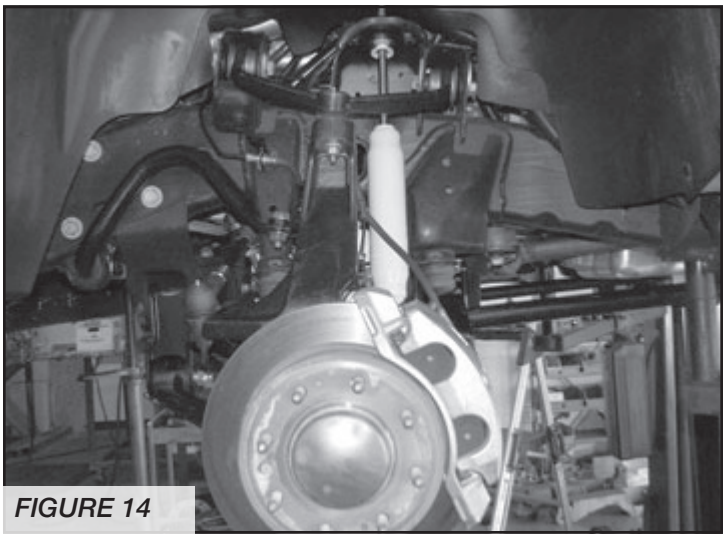

FIGURE 14

29. Locate the supplied adel clamps, ¼" lock washers and ¼"- 20 x ¾" bolts. Clamp the brake line and the wheel speed wire to the spindle. **SEE FIGURES 15-16**

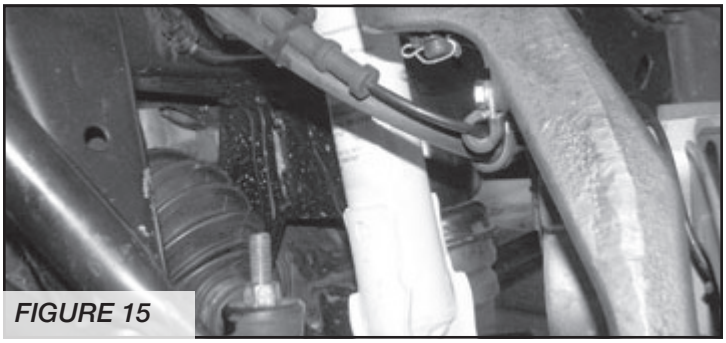

FIGURE 15

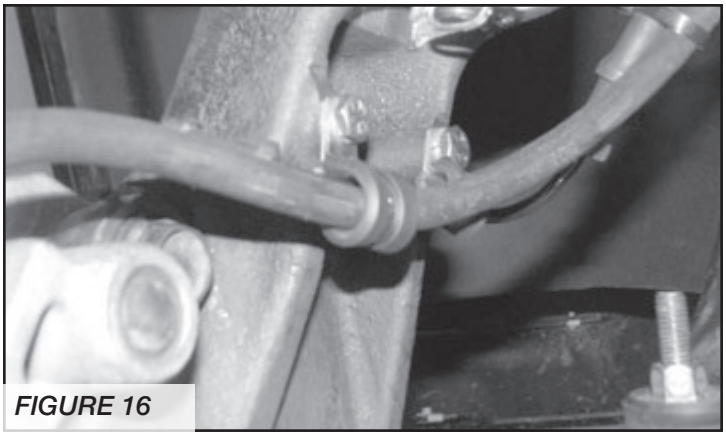

FIGURE 16

30. Repeat steps 4 – 29 on the passenger side.

31. Locate the factory driver side torsion bar, crossmember and the FT20550 torsion key. Install the torsion bars crossmember and the new Fabtech torsion key. The torsion bar key adjuster bolt should be reset to the measurement taken before the insulation. This is a temporary setting. When the Vehicle is on its own weight the measurement should 1/2" from the bottom side of the upper control arm to the droop stop. Adjust torsion bars accordingly.

REAR SUSPENSION

32. Install Fabtech shock part number FTS7299 or FTS810941. Torque bolts to 100 ft-lbs.

33. Install tires and wheels and torque lug nuts to wheel manufacturer's specifications. Turn front tires left to right and check for appropriate tire clearance. **Note - Some oversized tires may require trimming of the front bumper & valance.** Recheck all bolts for proper torque.

34. Recheck brake hoses, ABS wires and suspension parts for proper tire clearance while turning tires fully left to right.

35. Check the fluid in the front and rear differential and fill if needed with factory specification differential oil. **Note - some differentials may expel fluid after filling and driving. This can be normal in resetting the fluid level with the new position of the differential/s.**

36. Install Driver Warning Decal. Complete product registration card and mail to Fabtech in order to receive future safety and technical bulletins on this suspension.

37. Have vehicle properly aligned to factory specs. Readjust headlights.

Vehicles that will receive oversized tires should check ball joints, uniballs and all steering components every 2500-5000 miles for wear and replace as required.

RE-TORQUE ALL NUTS, BOLTS AND LUGS AFTER 50 MILES AND PERIODICALLY THEREAFTER.

For technical assistance call: 909-597-7800

- Product Warranty and Warnings -

Fabtech provides a Limited Lifetime Warranty to the original retail purchaser who owns the vehicle, on which the product was originally installed, for defects in workmanship and materials.

The Limited Lifetime Warranty excludes the following Fabtech items; bushings, bump stops, ball joints, tie rod ends, limiting straps, cross shafts, heim joints and driveshafts. These parts are subject to wear and are not considered defective when worn. They are warranted for 60 days from the date of purchase for defects in workmanship.

Dirt Logic and Performance Coilover take apart shocks are considered a serviceable shock with a one year warranty on leakage only. Service seal kits are available separately for future maintenance. All other shocks are covered under our Limited Lifetime Warranty.

Fabtech does not warrant any product for finish, alterations, modifications and/or installation contrary to Fabtech's instructions. Alterations to the finish of the parts including but not limited to painting, powder coating, plating and/or welding will void all warranties. Some finish damage may occur to parts during shipping, which is considered normal and is not covered under warranty.

Fabtech products are not designed nor intended to be installed on vehicles used in race applications or for racing purposes or for similar activities. (A "RACE" is defined as any contest between two or more vehicles, or any contest of one or more vehicle against the clock, whether or not such contest is for a prize). This warranty does not include coverage for police or taxi vehicles, race vehicles, or vehicles used for government or commercial purposes. Also excluded from this warranty are sales outside of the United States of America.

Installation of most suspension products will raise the center of gravity of the vehicle and will cause the vehicle to handle differently than stock. It may increase the vehicle's susceptibility to a rollover, on road and off road, at all speeds. Extreme care should be taken to operate the vehicle safely at all times to prevent rollover or loss of control resulting in serious injury or death. Fabtech front end Desert Guards may impair the deployment or operation of vehicles equipped with supplemental restraining systems/air bag systems and should not be installed if the vehicle is equipped as so.

Fabtech makes every effort to ensure suspension product compatibility with all vehicles listed on the website, but due to unknown auto manufacturer's production changes and/or inconstancies by the auto manufacturer, Fabtech cannot be responsible for 100% compatibility, including the fitment of tire and wheel sizes listed. The Tire and Wheel sizes listed in Fabtech's website are only a guideline for street driving with noted fender trimming. Fabtech is not responsible for damages to the vehicle's body or tires. Fabtech is not responsible for premature wear of factory components due to the installation of oversized tires and wheels.

Fabtech's obligation under this warranty is limited to the repair or replacement, at Fabtech option, of the defective product only. All costs of removal, installation or re-installation, freight charges, incidental or consequential damages are expressly excluded from this warranty. Fabtech is not responsible for damages and/or warranty of other vehicle parts related or non related to the installed Fabtech product. This warranty is expressly in lieu of all other warranties expressed or implied. This warranty shall not apply to any product that has been subject to accident, negligence, alteration, abuse or misuse as determined by Fabtech.

Fabtech suspension components must be installed as a complete system including shocks as shown on our website. All warranties will become void if Fabtech parts are combined and/or substituted with other aftermarket suspension products. Combination and/or substitution of other aftermarket suspension parts may cause premature wear and/or product failure resulting in an accident causing injury or death. Fabtech does not warrant products not manufactured by Fabtech.

Depending on the condition of the factory suspension components retained after the installation of a Fabtech suspension not all vehicles may have the same ride stance front to rear as described in the website. The blue color of suspension components shown in all Fabtech photographs are for display purposes only. Majority of all Fabtech components will be black specifically where noted with part numbers ending in BK.

Installation of Fabtech product may void the vehicles factory warranty; it is the consumer's responsibility to check with their local vehicle's dealer for warranty disposition before the installation of the product. Some state laws may prohibit modification of suspension to a vehicle in whole or in part. It is the responsibility of the installer and consumer to consult local laws prior to the installation of any Fabtech suspension product to comply with such written laws.

It is the responsibility of the distributor and/or the retailer to review all warranties and warnings of Fabtech products with the consumer prior to purchase.

Fabtech reserves the right to super cede, discontinue, change the design, finish, part number and/or application of parts when deemed necessary without written notice. Fabtech is not responsible for misprints or typographical errors within the website or price sheet. For the most recent Product Warranty and Warnings visit our website www.fabtechmotorsports.com