4331 EUCALYPTUS AVE, CHINO, CA, 91710
909-597-7800 Fax 909-597-7185

2008-2016 Ford F250/350/450 8 lug 4wd 2008-2016 Ford F450/550 10 lug 4wd

		Coilover Hoop Kit
Qty	Part #	Description
1	FT30452BK	Driver Lower Mount
1	FT30453BK	Passenger Lower Mount
1	FT30191	Hardware Kit
1	FT30513BK	4.0 Coil Over Hoop Drv.
1	FT30280BK	4.0 Coil Over Hoop Pass.
1	FT30322	Hdwr Sub-Assembly Kit

	FT30322	Hdwr Sub-Assembly Kit
Qty	Part #	Description
2	12001407102	14" Zip Tie
1	31000005052	5/16" Flat Washer
1	31180003352	5/16" C-Lock Nut
2	31181001152	5/16"-18 x 1" Bolt
2	50131501081	1/2"-13 x 1 1/2" Bolt
6	50000005252	1/2" Split Washer
1	31182001081	5/16"-18 x 2" Bolt
1	FT161	Sleeve
2	FT22078i	Instruction Sheet
2	FT30192BK	Limit Straps w/ Logo
2	FT30197	Upper Limit Strap Bracket
2	FT30198	Lower Limit Strap Bracket
1	FT30299	Nut Tab Drv
1	FT30300	Nut Tab Pass
1	FT30301	Dual Nut Tab Drv
1	FT30302	Dual Nut Tab Pass

	FT30191	Hardware Kit -
Qty	Description	Location
14	1/2"-13 x 1 1/2" Bolt	Hoop To Frame
6	1/2"-13 x 1 3/4" Bolt	Hoop To Frame To Limit Strap
24	1/2"-13 C-Lock Nut	Bracket & Limit Straps
52	1/2"SAE Flat Washer	
4	7/16"-14 x 1 3/4" Bolt	Hoop To Frame (top)
4	7/16"-14 C-Lock Nut	
8	7/16 SAE Flat Washer	
8	1/4"-20 X 1" Bolt	All Brake Line to Hoop
8	1/4"-20 Nylock Nut	
16	1/4" SAE Flat Washer	
2	14mm-2.0 x 30mm Bolt	Lower Mount to Axle
2	14mm Flat Washer	
2	18mm-2.5 x 130mm Bolt	Upper Axle Pivot Bolt
2	18mm-2.5 C-Lock Nut	
4	18mm Flat Washer	
1	Lock Tight	

	FTS22143	**2011-16 F250/350 SD 4.0 CONV**
1	FT30452BK	LOWER FRONT MOUNT DRVR 05 SD
1	FT30453BK	LOWER FRONT MOUNT PASS 05 SD
1	FT30191	HARDWARE KIT
1	FT30513BK	4.0 COIL OVER HOOP DRIVER BLK
1	FT30280BK	4.0 COIL OVER HOOP PASSENGER
2	FT30456	AXLE SWAY BAR EXTENSION
1	FT30450	HARDWARE SUBASSEMBLY
1	FT30451	HARDWARE KIT
	FT30450	**HARDWARE SUBASSEMBLY**
1	FT161	SLEEVE .500 X .370 X 1.125
2	FT22078i	INSTRUCTIONS
2	FT30192BK	14" LIMIT STRAP QUAD W/LOGO
2	FT30197	UPPER LIMIT STRAP BRACKET
2	FT30198	LOWER LIMIT STRAP BRACKET
1	FT30299	NUT TAB DRIVER CLEAR ZINC
1	FT30300	NUT TAB PASSENGER CLEAR ZINC
1	FT30301	DUAL NUT TAB DRIVER CLEAR ZINC
1	FT30302	DUAL NUT TAB PASSENGER
1	FT30514	ABS BRACKET
	FT30451	**HARDWARE KIT**
8	12001407100	ZIP TIE 14"
4	31000005052	WASHER 5/16 SAE G5 Z1
4	31180003352	NUT 5/16-18 STOVER G5 Z1
2	31181001152	SCRW 5/16-18 1"HEX SELF TAP G5
4	31182001081	SCREW 5/16-18 X 1 HEX G8 Z2
6	50000005252	WASHER 1/2 SPLIT LOCK G8 Z1
2	50131251081	SCREW 1/2-13 X 1¼ HEX G8 Z2
4	50000005052	1/2 WASHER SAE G5 Z1
2	50130004152	1/2–13 C-LOCK NUT

TOOL LIST:

- **Floor jack & Jack stands**
- **Assorted metric & S.A.E. wrenches & sockets**
- **Air Hammer**
- **Die Grinder with cutoff wheel**
- **Drill with 7/16” & 1/2” bit**

CHECK ALL PARTS INCLUDED IN THIS KIT TO THE PARTS LIST ABOVE BEFORE

BEGINNING INSTALLATION OF THE KIT. IF ANY PIECES ARE MISSING, CONTACT FABTECH AT 909-597-7800

FABTECH RECOMMENDS FTS92024BK HYDRAULIC BUMP STOP KIT USE ON TRUCKS THAT WILL HAVE HEAVY OFF ROAD USE.

THIS KIT MUST BE INSTALLED WITH FABTECH DIRT LOGIC COILOVER SHOCKS NOT INCLUDED IN THIS BOX KIT.

THIS KIT IS COMPATIBLE WITH FABTECHS 4/6/8" RADIUS ARM SYSTEM OR 4/6/8" 4 LINK SYSTEM ONLY.

NOTE: IF YOU HAVE THE FABTECH DUAL SHOCK KIT FTS52002 ON THE VEHICLE, YOU WILL NEED SEVERAL OF THE PARTS THAT WERE DISCARDED DURING THE INSTALL OF THE DUAL SHOCK KIT. THE FORD PARTS REQUIRED ARE THE FACTORY BRAKE LINE BRACKETS. THE FABTECH PARTS REQUIRED ARE THE SWAY BAR DROP BRACKETS WITH HARDWARE AND SWAY BAR END LINKS WITH THE BUSHINGS AND HARDWARE. CONTACT FABTECH FOR PART NUMBERS IF NESSESARY. 909-597-7800

Fabtech suspension systems when used on "Gas engine" trucks may require that the front drive shaft be modified. This is done to give adequate clearance between the driveshaft and the factory exhaust. Fabtech <u>does not</u> recommend modifying the exhaust and / or the catalytic converters. Contact Fabtech for additional information.

***** SPANNER WRENCH IS NOT INCLUDED IN THIS KIT. IF NEEDED, ORDER FTS89905.**

INSTRUCTIONS:

1. Disconnect the negative terminal on the battery. Jack up the front end of the truck and support the frame with jack stands. **NEVER WORK UNDER AN UNSUPPORTED VEHICLE.** Remove the front tires.

2. Support the front axle with a floor jack. Raise the floor jack approx. 1". Working on both sides of the truck, remove the front shocks and discard. Save the factory lower shock bolt and nut tab. Disconnect the front sway bar end links from the axle mount and save the hardware.

3. Remove the brake line bracket from the factory coil bucket and discard hardware. If a Fabtech kit has already been installed, remove the brake line drop bracket supplied with that kit and discard. Remove the brake line and ABS line mounts from the lower coil perch and discard the hardware.

4. Remove the trac bar bracket from the driver side of the frame and save the hardware.

5. Lower the floor jack supporting the axle until the coil springs are free of tension. Remove the coil springs and discard.

6. Locate bump stop on the bottom of the frame below the coil bucket and remove. If you have a Fabtech kit that has already been installed on the truck, remove the bump stop along with the drop bracket and discard. Fabtech recommends running the FTS92001 optional Hydraulic Bump Stop Kit. The installation of the coil over kit does not require the installation of a bump stop.

7. Working from the driver's side of the truck, use a die grinder with a cut off wheel to cut a cross pattern in the heads of the rivets that attach the factory coil bucket to the frame. Using an air chisel, remove the heads of the rivets and pry the coil bucket free from the frame. With the bucket removed from the frame use a hammer and center punch and knock the rest of the rivets out of the holes in the frame (unbolt the power steering line bracket from the hoop). SEE PHOTOS BELOW.

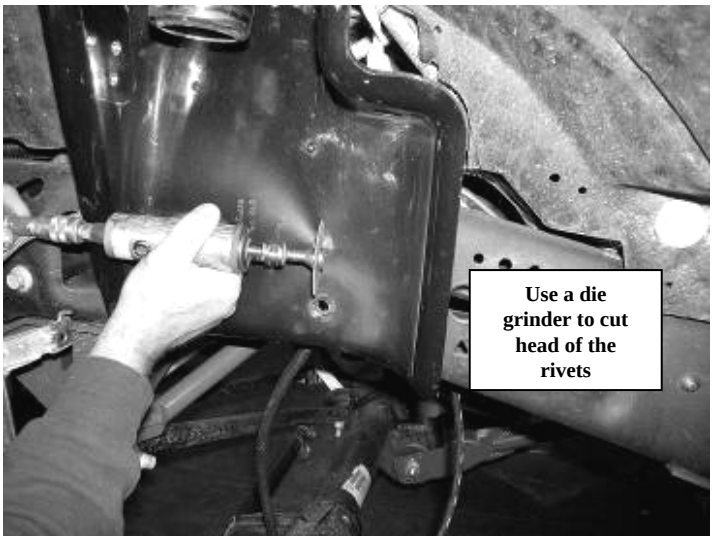

8. Drill all the holes on the outside and bottom of the frame (where the rivets were just removed), to ½". SEE PHOTO BELOW.

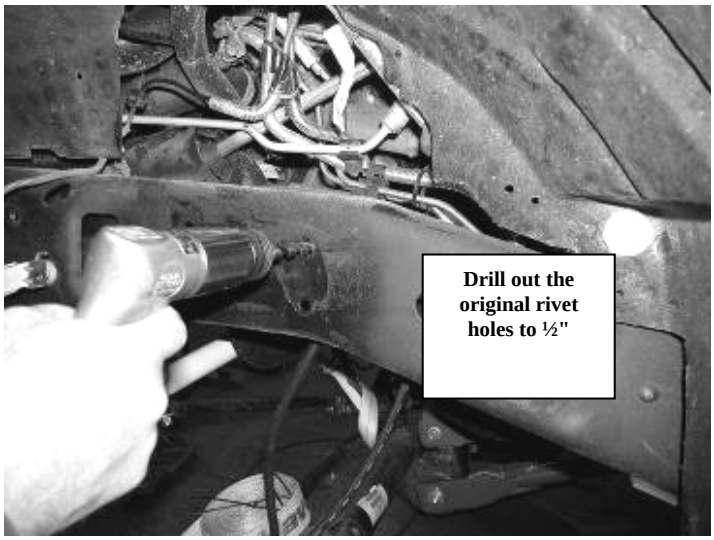

9. Locate the factory lower coil perch on the axle and remove. Discard the perch and hardware.

10. Using a sharp razor blade cut a 6” wide x 4” high rectangle in the plastic inner fender well as shown below. When cutting the inner fender well do not cut the heat shield felt on the backside of the inner fender well. SEE PHOTOS IN NEXT COLUMN.

Passenger Side Marked and Uncut

Driver Side Marked and Uncut

11. Repeat steps eight through eleven on the passenger side of the truck. Remove the wiring harness from the face of the frame and save the hardware. Carefully bend the A/C lines to make room for the coilover bucket. SEE PHOTO BELOW.

Photo shows bent A/C line

12. Working from the driver side of the truck, locate FT30452 lower coil over axle mount. Place the mount on the axle were the factory coil perch was located, aligning the arm of the new perch into the factory lower shock mount on the axle. Using the supplied 14mm bolt and washer and small amount of the supplied thread locking compound attach it to the axle. Using the original lower shock bolt and nut tab attach the support arm of the mount to the factory shock mount on the axle. Torque the 14mm bolt to 100 ft. lbs. and the support arm bolt to 80 ft. lbs. SEE PHOTO BELOW

13. Locate FT30513BK (driver side) Coil Over Hoop and align onto the frame where the factory bucket was mounted. Align the holes in the hoop to the holes in the frame. Using the supplied ½" x 1-½" hardware in the holes on the outside of the frame, attach the hoop to the frame, leave loose at this time.

14. Drill the three rear holes to ½" through the frame. Locate FT30299 & FT30301 nut tabs and use the supplied ½" x 1 ½" hardware attach to the frame. Locate FT161 Sleeve and the supplied 5/16"x2" hardware. Attach the power steering line bracket to the back of the bucket and torque to 15lbs. **NOTE: For 11- up vehicles install FT30514 (ABS Bracket) to the rear of the hoop.** Once tightened, make sure that the lines are NOT making contact with the hoop. Carefully bend them for additional clearance if needed. Repeat steps 14 & 15 on the passenger side of the truck. SEE PHOTOS IN NEXT COLUMN. Torque 1/2" hardware to 127 ft-lbs.

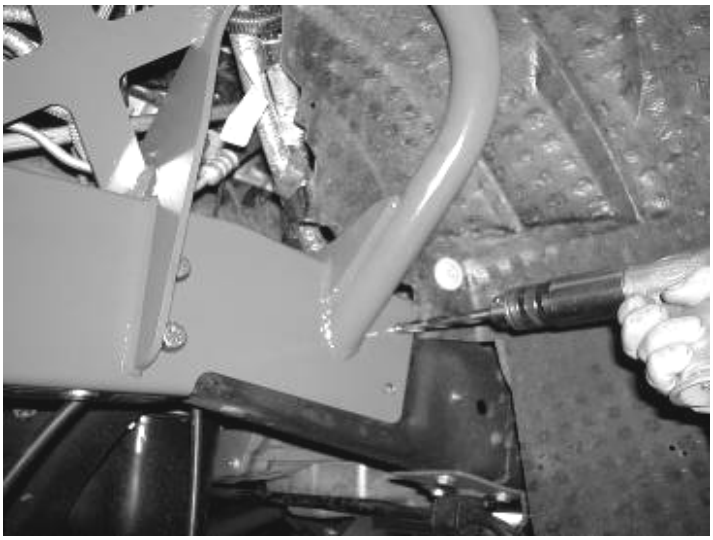

Driver side shown

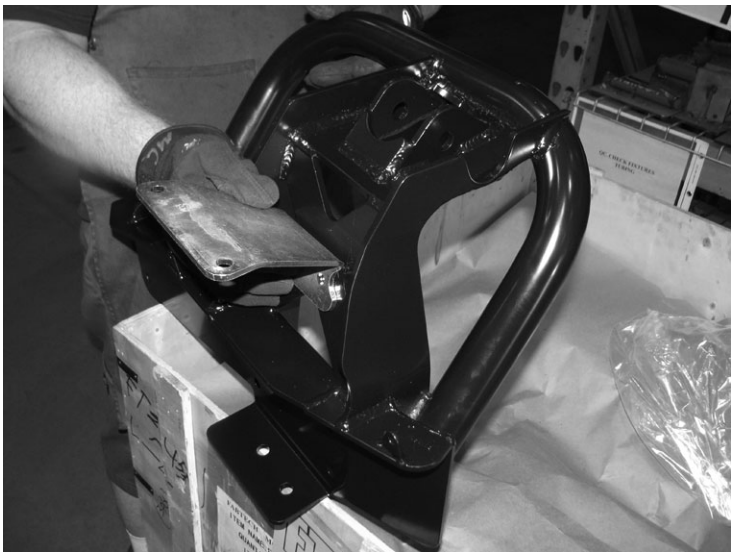

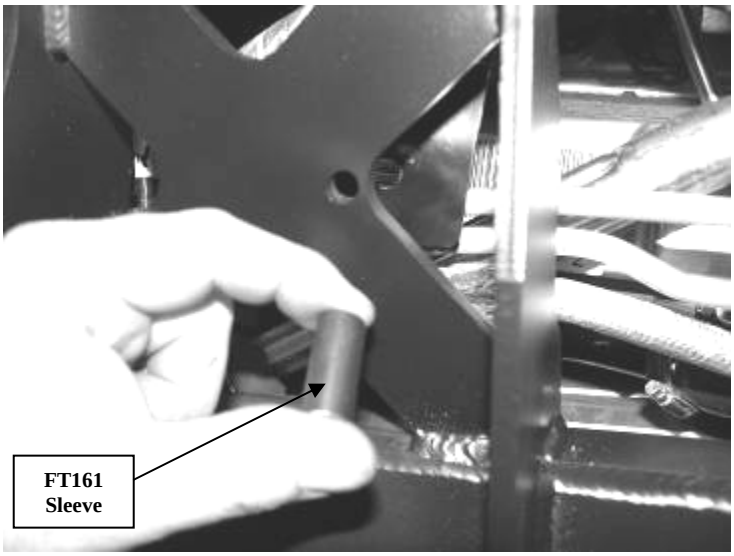

Driver side shown

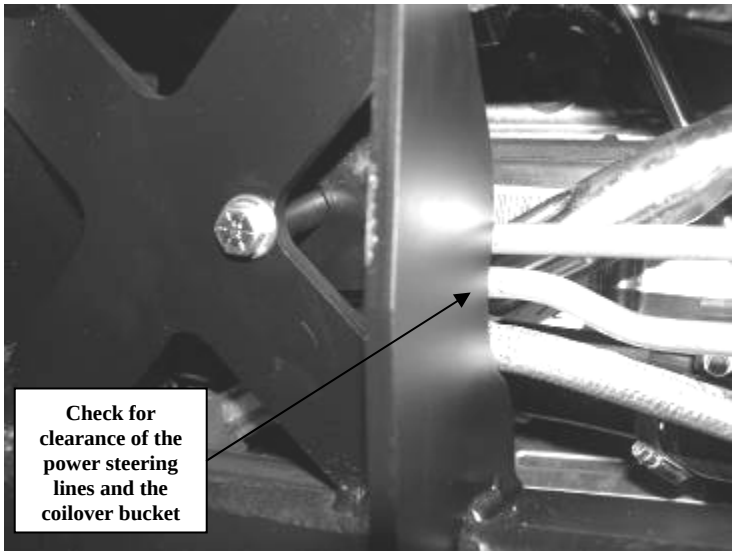

Driver side shown

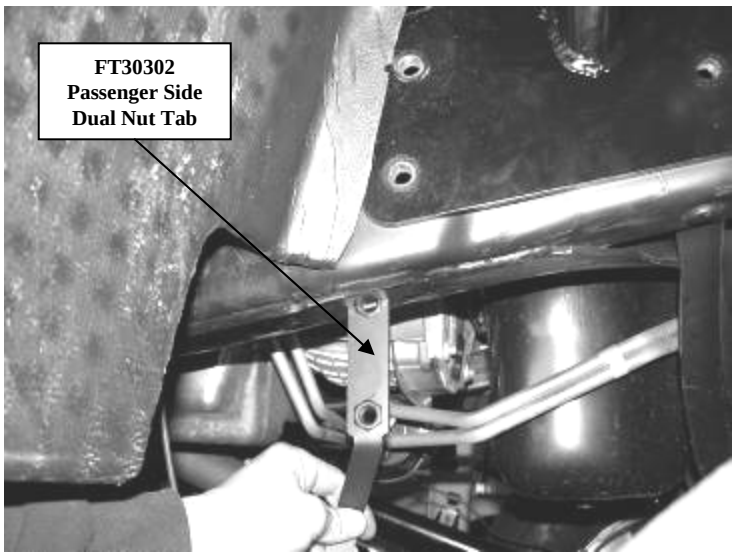

Passenger side Shown

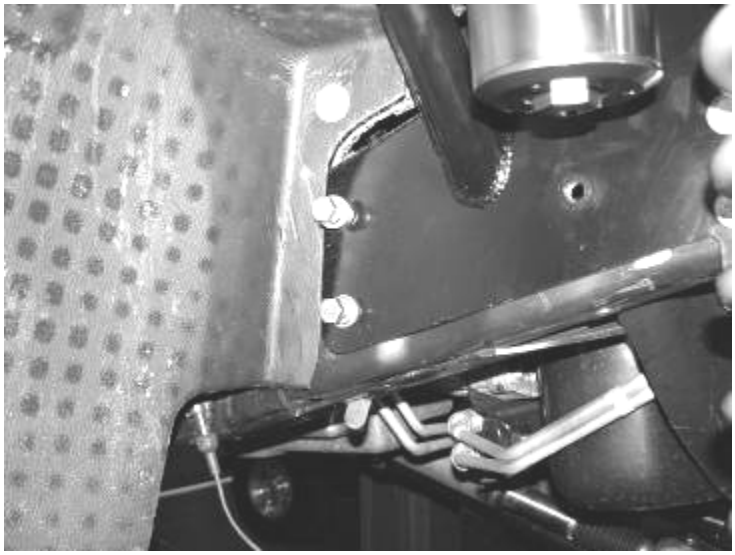

Passenger side Shown

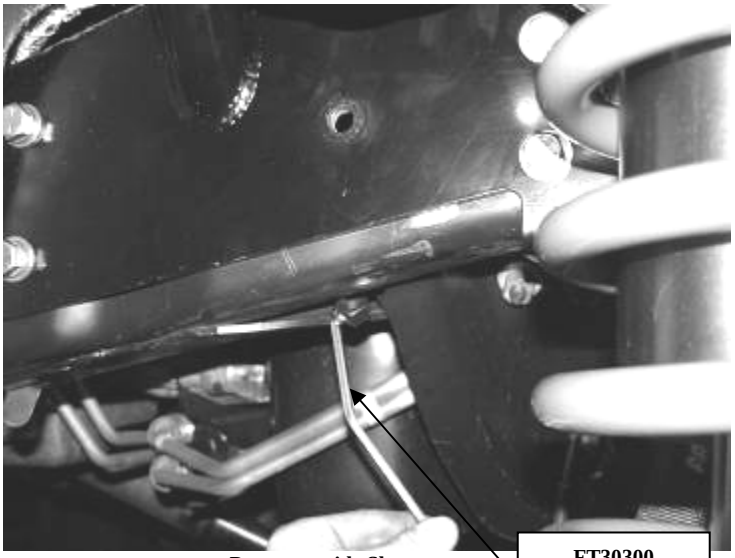

Passenger side Shown

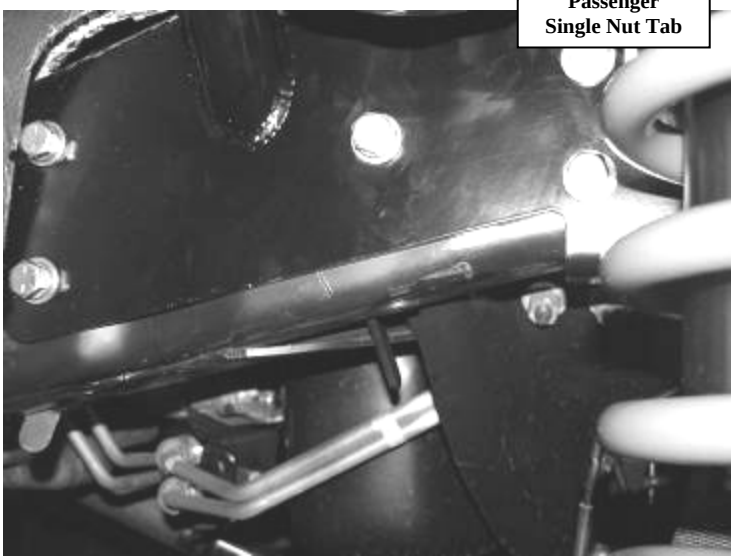

Passenger side Shown

15. Reinstall the trac bar bracket to the frame and torque the frame mount bolts to 80 ft. lbs., motor mount bolt to 55 ft. lbs., & trac bar bolt to 400 ft. lbs.

16. Locate FT30197 upper limit strap bracket. Place the bracket on the inside of the frame to the rear hole on the bottom of the frame (the long side of the bracket mounts to the frame with the short side attaching to the strap). Using the supplied 1/2” x 1 ¾” hardware, attach it to the frame. Attach the forward hole of the hoop to the frame with the supplied 1/2” x 1 ½” hardware at this time also. Torque to 50 ft. lbs. SEE PHOTO BELOW.

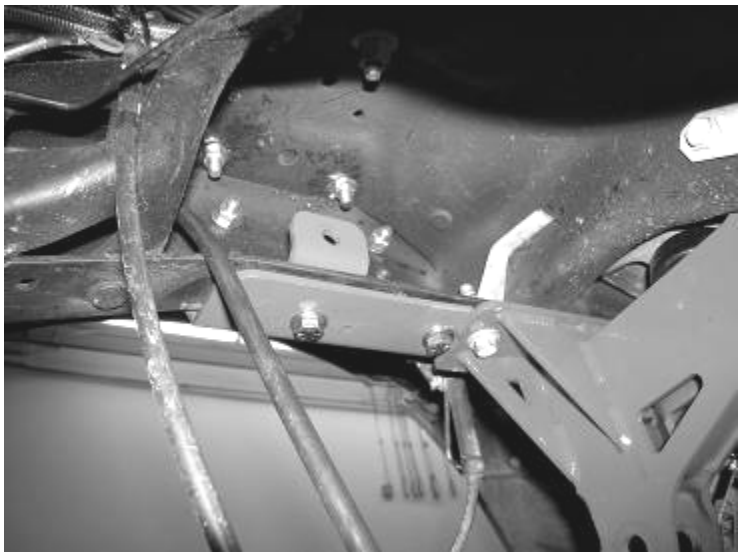

View of driver's side from looking rear to front

17. Locate the upper axle pivot on the front axle. Remove the bolt and discard. Locate FT30198 lower limit strap bracket and attach to the inside of the upper pivot using the supplied 18mm x 130mm bolt, nut, and washer. If installing this kit on an 8" kit, the long end of the bracket will be facing upward and on a 4 & 6" kit the short end will be facing up. SEE PHOTOS ON NEXT PAGE.

Picture Shown With Tab Set Up For 8" Kit

Picture Shown With Tab Set Up For 6" Kit

18. If installing Fabtech's optional Hydraulic front bump stop kit, do so at this time.

19. Locate the supplied two large zip ties. Use the zip ties and attach the wiring harness to the power steering lines inside the driver's side wheel well. SEE PHOTO IN NEXT COLUMN.

20. Locate the two holes on the passenger side coilover hoop. The top hole will need to be drilled out to 17/64". Locate the electrical wiring harness on the passenger side which was removed earlier during install and attach to the coil bucket with the factory hardware. SEE PHOTO IN NEXT COLUMN

21. Locate coilovers and insert one of the supplied FT83034 mis-alignment spacers to each side of the top bearing in the shock. Next locate the supplied FT1040 and FT1041 Delron bushings and place the one with the larger inner ring on the side of the bearing without the snap ring and the one with the smaller inner ring on the side with the snap ring. Insert the top of the coil over into the coil over hoop. Using the supplied 5/8" x 3.5" bolt and washers and FT30183 nut tab connect the coil over to the hoop. SEE DIAGRAM ON LAST PAGE.

22. Locate the last two FT83034 mis-alignment spacers and insert them into the bearing on the bottom of the shock. Using the supplied 5/8" x 3.5" bolt, nut, and washer attach it to the lower mount on the axle. SEE DIAGRAM ON LAST PAGE.

23. Install the supplied limit straps to the upper and lower mounts using the supplied ½" x 1 ¾" bolt, nuts, and washers. You will need to stack three ½" washers between the limit strap and mounting brackets on both upper and lower mounts. SEE DIAGRAM BELOW.

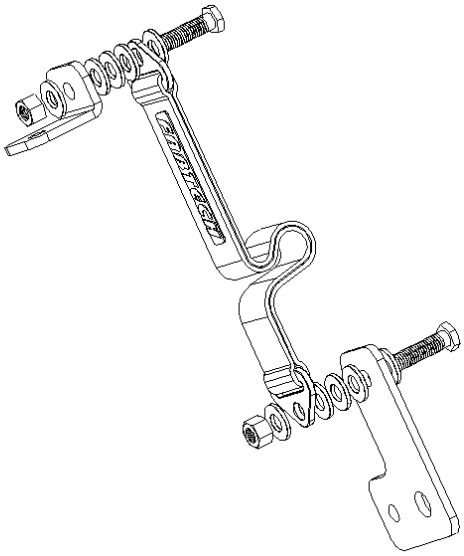

24. Using the Supplied ¼" x 1" bolt, nut, and washer attach the ABS line to the new lower coil perch as shown below. The original line clamps will be reused. SEE PHOTO BELOW.

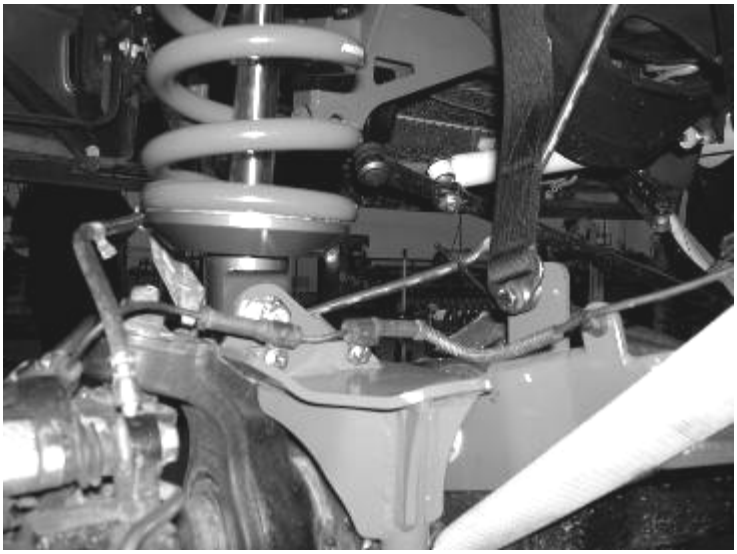

25. Re-attach the upper brake line bracket to the frame just in front of the coil over hoop with the original hardware. Attach the lower brake line bracket to the new lower coil over mount using the supplied ¼" x 1" bolt, nut, and washer. SEE PHOTO BELOW

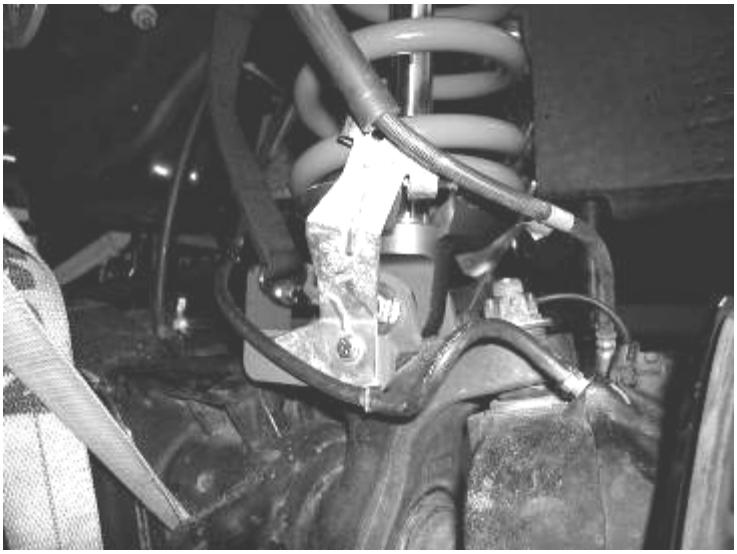

26. Make sure the vacuum line from the hub assembly is still routed in the stock position. If the line is tight carefully pull some slack free from the frame mounts.

27. Reconnect the front sway bar back to the axle mount using the original hardware on the 2008 – 2010 models. **2011 models** Locate the FT30456 Lower sway bar extension and attach the extension to the axle using a 1/2x13x1-1/4 bolt, nut and washer as shown in the diagram and pictures below. Torque to 127 ft-lbs.

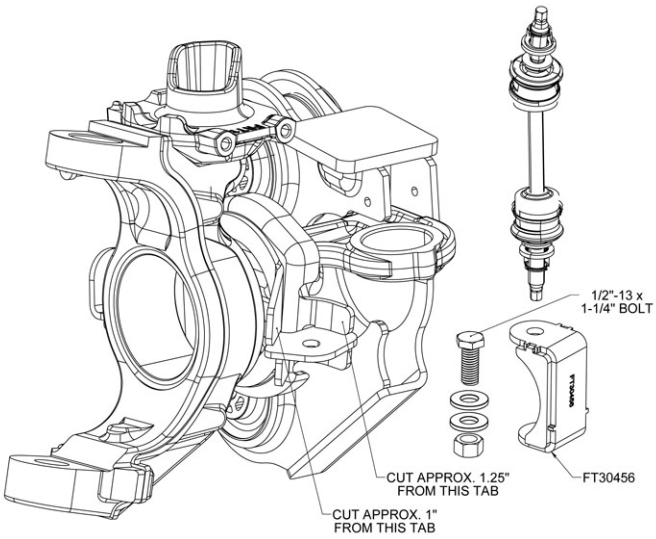

28. Reinstall the front tires and set the truck back on the ground. Turning the steering wheel fully in each direction, check for contact between the tires and any newly installed components. Drive the truck fifty miles and have a professional front end alignment done. Re-adjust headlights.

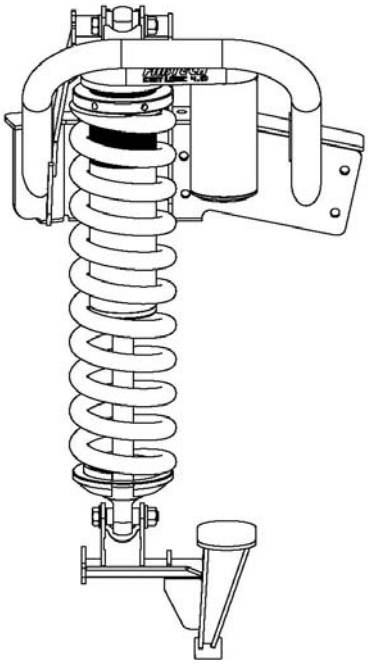
RIDETECH

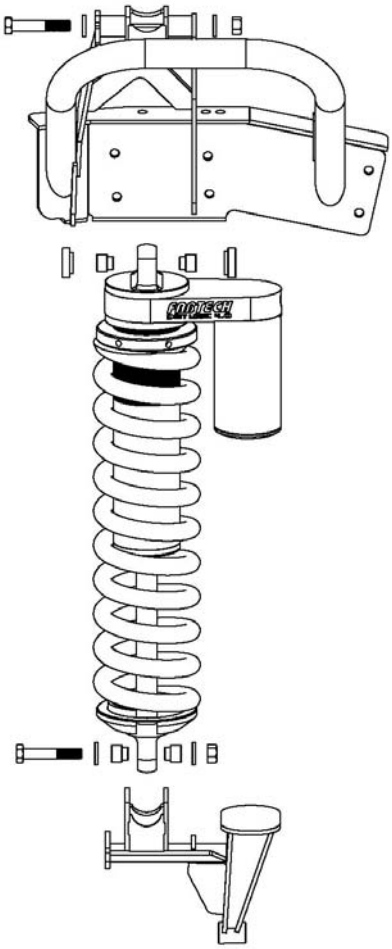
RIDETECH

RETORQUE ALL NUTS, BOLTS AND LUGS AFTER 50 MILES AND PERIODICALLY THEREAFTER.

For technical assistance call: 909-597-7800

Product Warranty and Warnings-

Fabtech provides a Limited Lifetime Warranty to the original retail purchaser who owns the vehicle, on which the product was originally installed, for defects in workmanship and materials.

The Limited Lifetime Warranty excludes the following Fabtech items; bushings, bump stops, ball joints, tie rod ends, limiting straps, cross shafts, heim joints. These parts are subject to wear and are not considered defective when worn. They are warranted for 60 days from the date of purchase for defects in workmanship.

Take apart shocks are considered a serviceable shock with a one year warranty on leakage only. Service seal kits are available separately for future maintenance. All other shocks are covered under our Limited Lifetime Warranty.

Fabtech does not warrant any product for finish, alterations, modifications and/or installation contrary to Fabtech's instructions. Alterations to the finish of the parts including but not limited to painting, powdercoating, plating and/or welding will void all warranties. Some finish damage may occur to parts during shipping which is considered normal and is not covered under warranty.

Fabtech products are not designed nor intended to be installed on vehicles used in race applications or for racing purposes or for similar activities. (A "RACE" is defined as any contest between two or more vehicles, or any contest of one or more vehicle against the clock, whether

or not such contest is for a prize). This warranty does not include coverage for police or taxi vehicles, race vehicles, or vehicles used for government or commercial purposes. Also excluded from this warranty are sales outside of the United States of America.

Installation of most suspension products will raise the center of gravity of the vehicle and will cause the vehicle to handle differently than stock. It may increase the vehicle's susceptibility to a rollover, on road and off road, at all speeds. Extreme care should be taken to operate the vehicle safely at all times to prevent rollover or loss of control resulting in serious injury or death. Fabtech front end Desert Guards may impair the deployment or operation of vehicles equipped with supplemental restraining systems/air bag systems and should not be installed if the vehicle is equipped as so.

Fabtech makes every effort to ensure suspension product compatibility with all vehicles listed in the catalog, but due to unknown auto manufacturers production changes and/or inconstancies by the auto manufacturer, Fabtech cannot be responsible for 100% compatibility, including the fitment of tire and wheel sizes listed. The Tire and Wheel sizes listed in Fabtech's catalog are only a guideline for street driving with noted fender trimming. Fabtech is not responsible for damages to the vehicle's body or tires.

Fabtech's obligation under this warranty is limited to the repair or replacement, at Fabtech option, of the defective product only. All costs of removal, installation or re-installation, freight charges, incidental or consequential damages are expressly excluded from this warranty. Fabtech is not responsible for damages and/or warranty of other vehicle parts related or non related to the installed Fabtech product. This warranty is expressly in lieu of all other warranties expressed or implied. This warranty shall not apply to any product that has been subject to accident, negligence, alteration, abuse or misuse as determined by Fabtech.

Fabtech suspension components must be installed as a complete system including shocks as shown in our current catalog. All warranties will become void if Fabtech parts are combined and/or substituted with other aftermarket suspension products. Combination and/or substitution of other aftermarket suspension parts may cause premature wear and/or product failure resulting in an accident causing injury or death. Fabtech does not warrant products not manufactured by Fabtech.

Installation of Fabtech product may void the vehicles factory warranty; it is the consumer's responsibility to check with their local vehicle's dealer for warranty disposition before the installation of the product.

It is the responsibility of the distributor and/or the retailer to review all warranties and warnings of Fabtech products with the consumer prior to purchase.

Fabtech reserves the right to supercede, discontinue, change the design, finish, part number and, or application of parts when deemed necessary without written notice. Fabtech is not responsible for misprints or typographical errors within the catalog or price sheet.