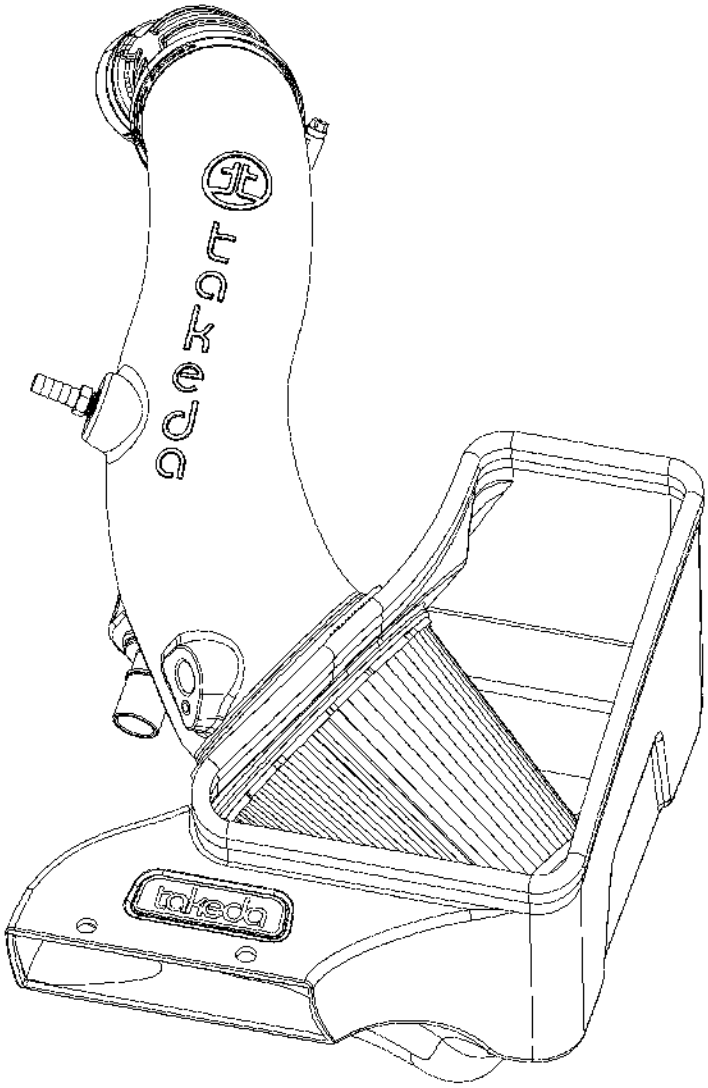

advanced FLOW engineering

Cold Air Intake System

Instruction Manual P/N: 56-10074R / 56-10074V

Make: HYUNDAI	**Model:** ELANTRA N LINE	**Year:** 2021-2026	**Engine:** L4-1.6L (t)
Make: KIA	**Model:** K4 GT-LINE TURBO	**Year:** 2025-2027	**Engine:** L4-1.6L (t)

- **Please read the entire instruction manual before proceeding.**
- **Ensure all components listed are present.**
- **If you are missing any of the components, call customer support at 951-493-7185.**
- **Ensure you have all necessary tools before proceeding.**
- **Do not attempt to work on your vehicle when the engine is hot.**
- **Retain factory parts for future use.**

Label	Qty.	Description	Part Number
A	1	Air Filter (Pro 5R) For 56-10074R	24-91144
A	1	Air Filter (D2) For 56-10074V	21-91144V
B	1	Tube	05-5670074B1
C	1	Housing	05-5610074B2
D	1	Clamp, 048 (2-9/16” – 3-1/2”)	03-50007
E	1	Clamp, 032 (1-9/16” – 2-1/2”)	03-50016
F	1	Grommet, Rubber	03-50139
G	1	Fitting, 3/8”ID x 1/4” NPT	03-50193
H	1	Bumper, Rubber	03-50769
J	1	Seal, Trim, Double Bulb (35.25” Length)	05-01534
K	1	Fitting, Recirculating, 1”	05-01823
M	1	Coupler, Silicone: 2-1/8” x 3” x 30 Deg	05-01825
N	1	Insert, Vent, Aluminum (for 2024+ vehicles)	05-01860

Installation will require the following tools:

Socket Set, Torx Set, Extensions, Rachet wrench, Pliers, Clamp Pliers, Wrench set

Warranty Information available at: https://afepower.com/warranty

Fitment Note:2024+ vehicles may experience diagnostic trouble code P04DB (Crankcase Ventilation System Disconnected) if the Aluminum Vent Insert (item N) is not installed.

Make sure Aluminum Vent Insert (item N) is installed before completing the installation to prevent diagnostic trouble code P04DB

Emissions Disclaimer: This product is not currently CARB exempt and is not available for purchase in California or for use on any vehicle registered with the California Department of Motor Vehicles. CARB exemption applications can take time to process, please contact us or visit our website for the latest updates on its status.

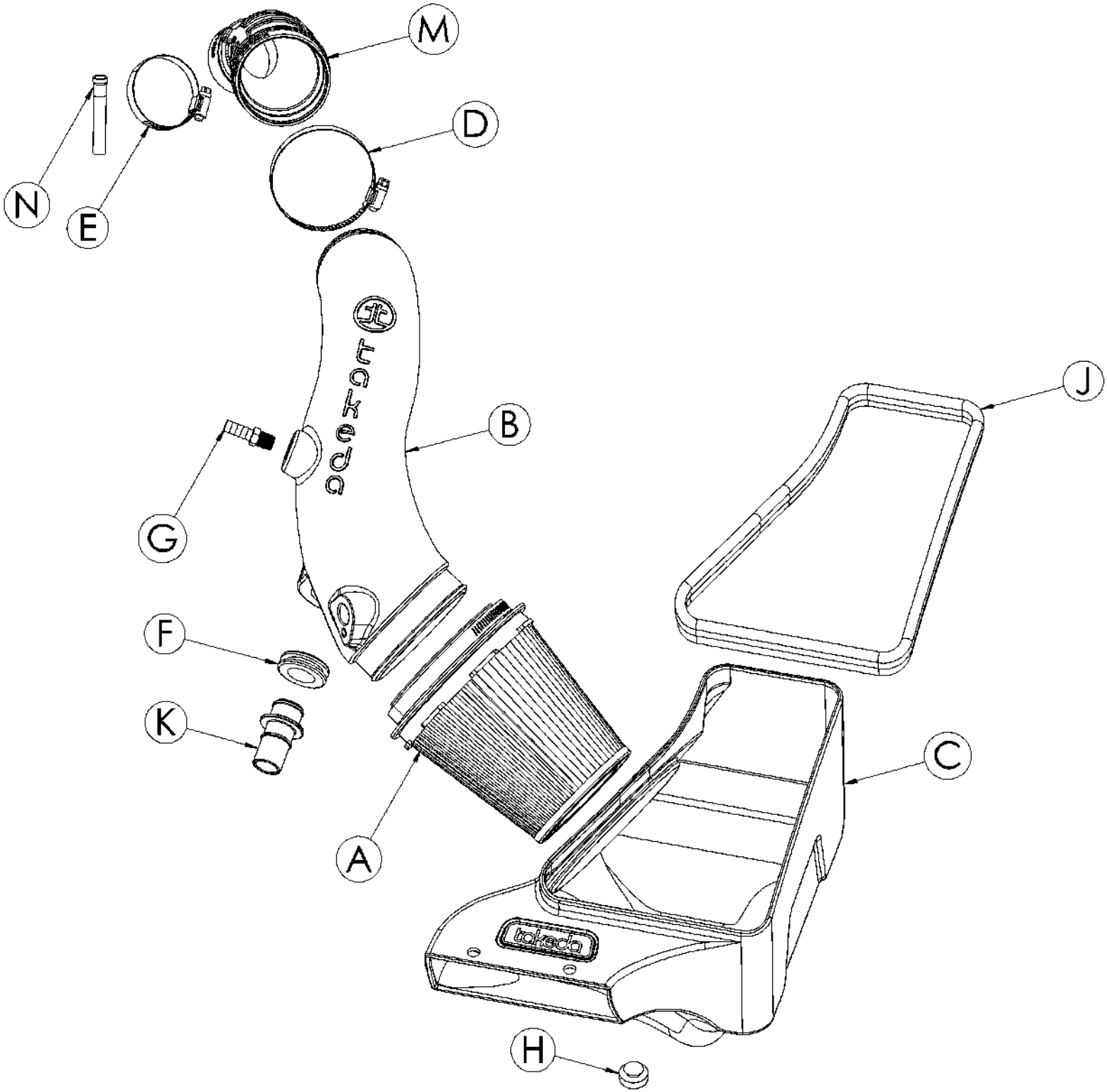
M
D
N
E
B
J
G
F
K
C
A
H

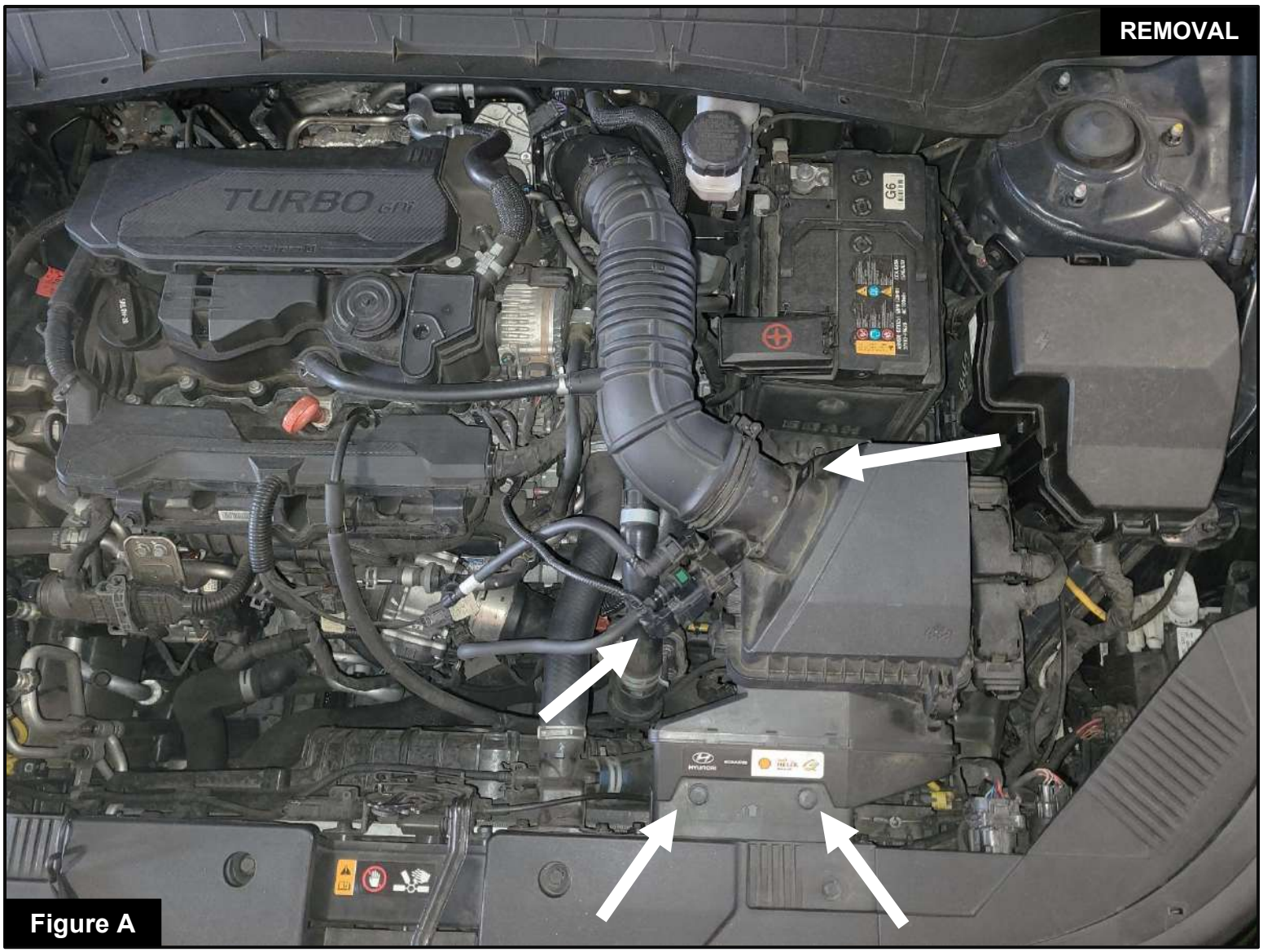

Figure A

Refer to Figure A for Steps 1-2

Step 1:Remove the factory retaining clips for the scoop.

Step 2:Disconnect the sensor electrical harness from the ejector fitting and the anchor clip near the airbox.

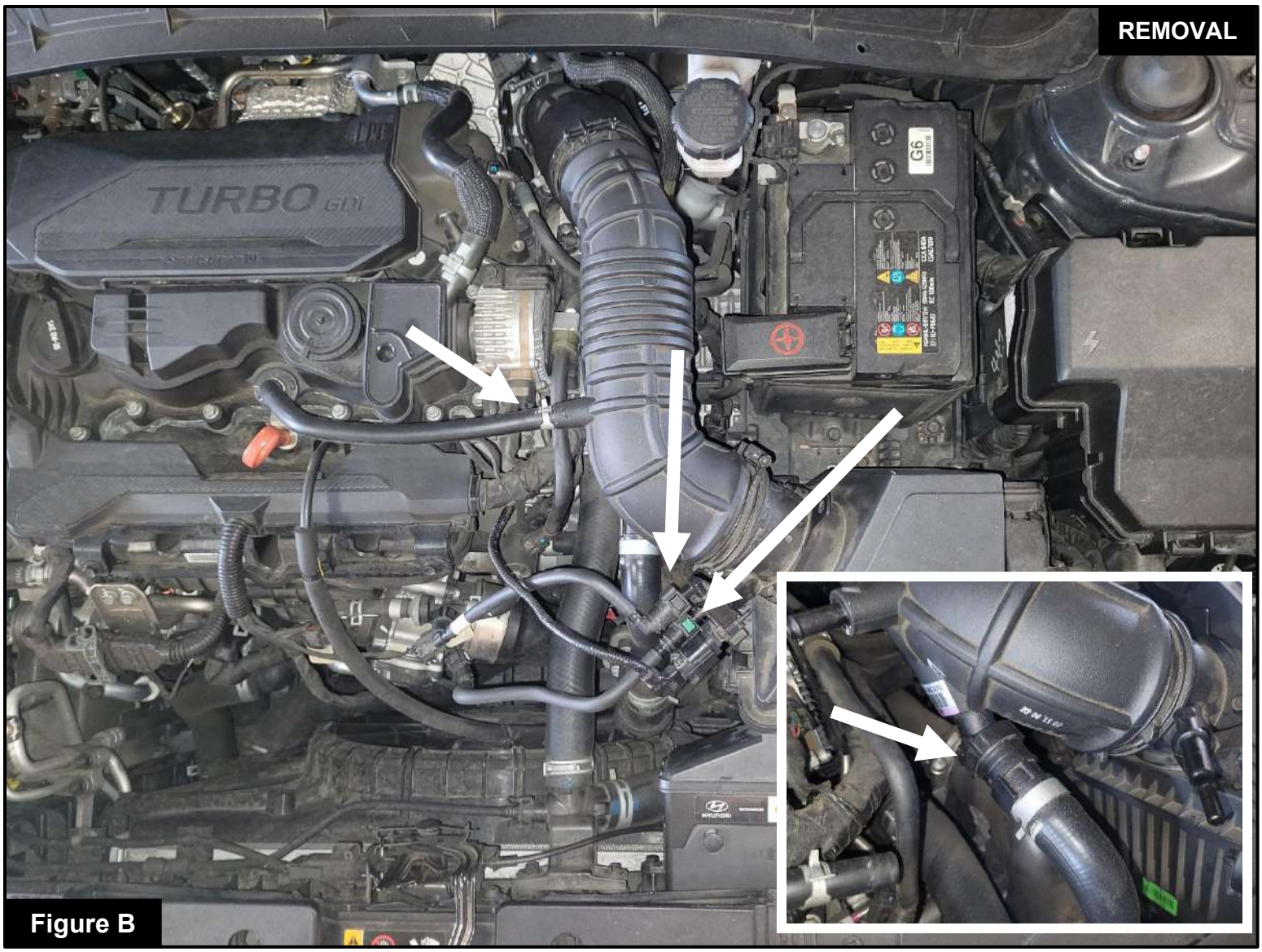

Figure B

Refer to Figure B for Steps 3-5

Step 3:Disconnect both ejector fitting quick-connect hoses by pressing the side release tabs and pulling the fittings straight off.

Step 4:Disconnect the recirculation quick-disconnect hose located at the bottom of the factory intake tube by pressing the release tabs on both sides and pulling the hose straight out; you may need to reach around the intake tube with both hands for better access.

Step 5:Use pliers to disconnect the PCV hose from the factory tube.

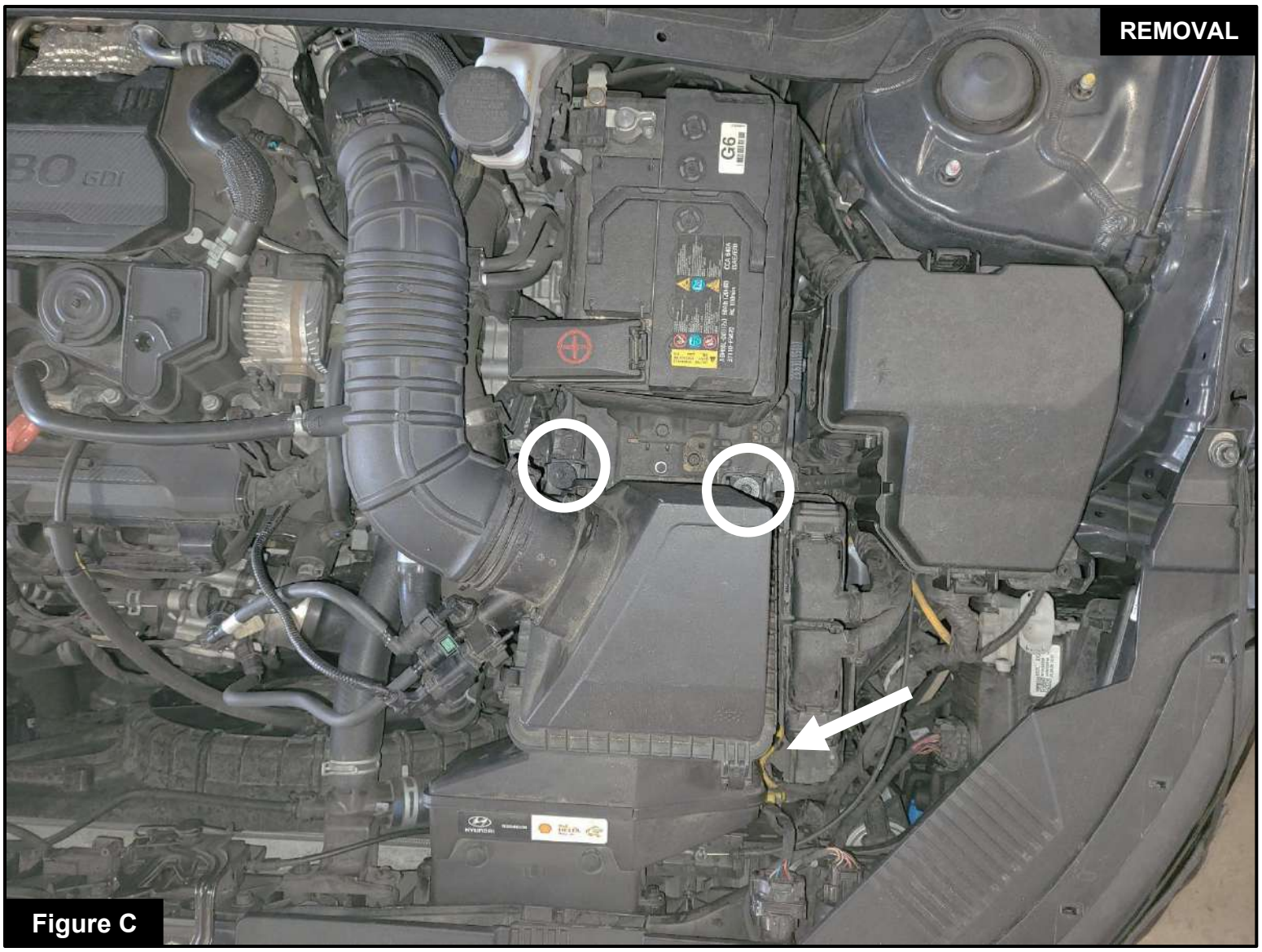

Figure C

Refer to Figure C for Step 6

Step 6: Use a 10mm socket with an extension to remove the screws securing the factory air box. Screws will be reused during installation.

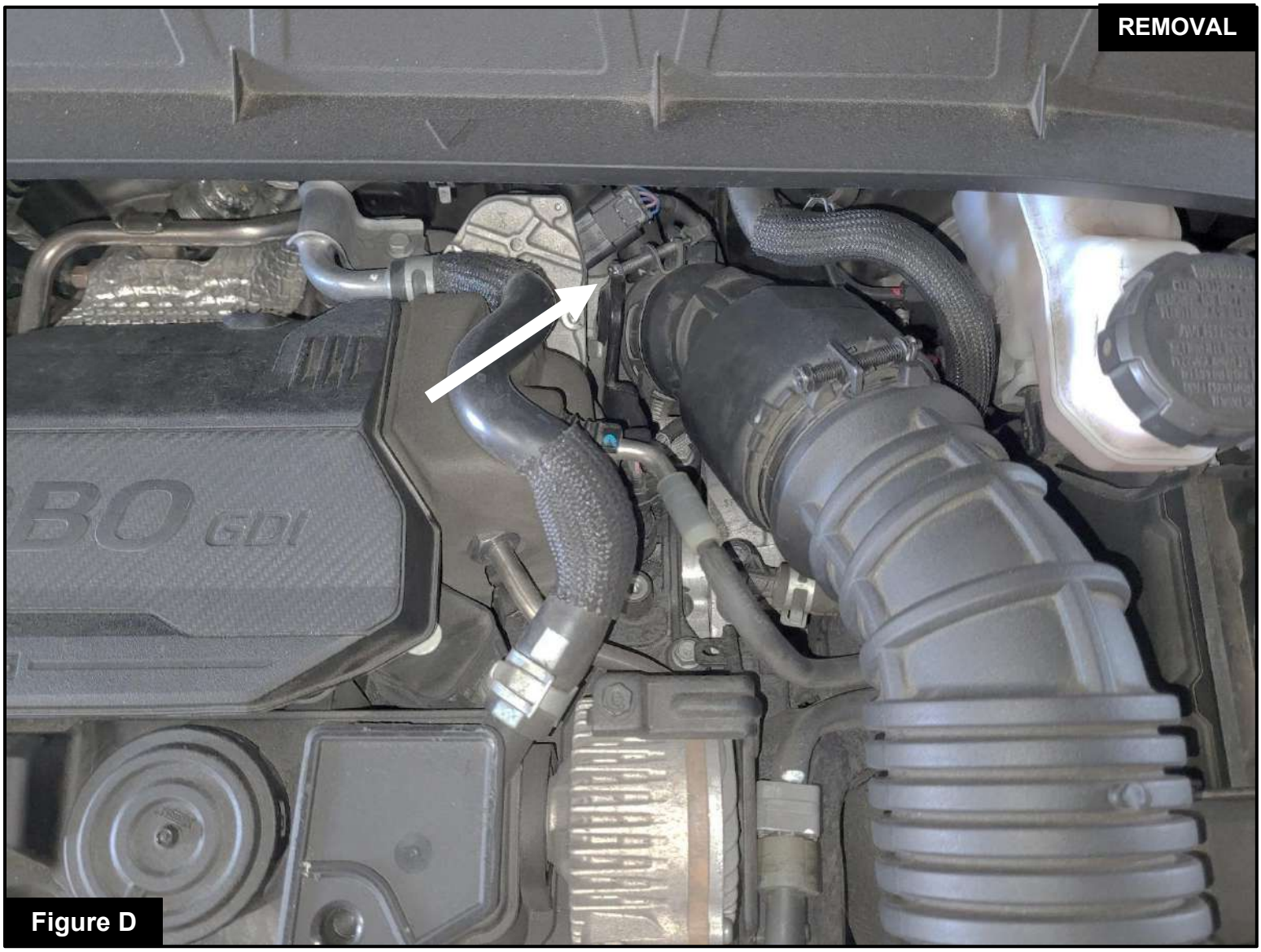

Figure D

Refer to Figure D for Steps 7-8

Step 7:Use a 10mm socket wrench to loosen the hose clamp closest to the firewall, which secures the factory intake tube to the turbo inlet.

Step 8:Remove the factory air box as a complete unit

Figure F

Refer to Figure F for Steps 9-10

Step 9:Install the provided rubber bump stop to the **TAKEDA** housing.

Step 10:Transfer the rubber isolation mount and metal insert from the factory air box to the **TAKEDA** housing.

Figure G

Refer to Figure G for Steps 11-13

Step 11:Use a 10mm driver or socket wrench to remove the ejector assembly from the factory housing and transfer it onto the **TAKEDA** intake tube. Secure it using the factory screw.

At this time, inspect the O-ring to make sure it has not fallen off and is not cracked, as this could lead to installation issues or air leaks

Step 12:Use a 15mm wrench to install the provided NPT fitting into the **TAKEDA** intake tube. Tighten until resistance is felt. A small gap between the hex portion of the fitting and the intake tube is normal. Do not overtighten. Over-tightening can damage the threads.

Step 13:Install the provided rubber grommet and recirculation fitting into the **TAKEDA** intake tube with the long end of the fitting facing outward.

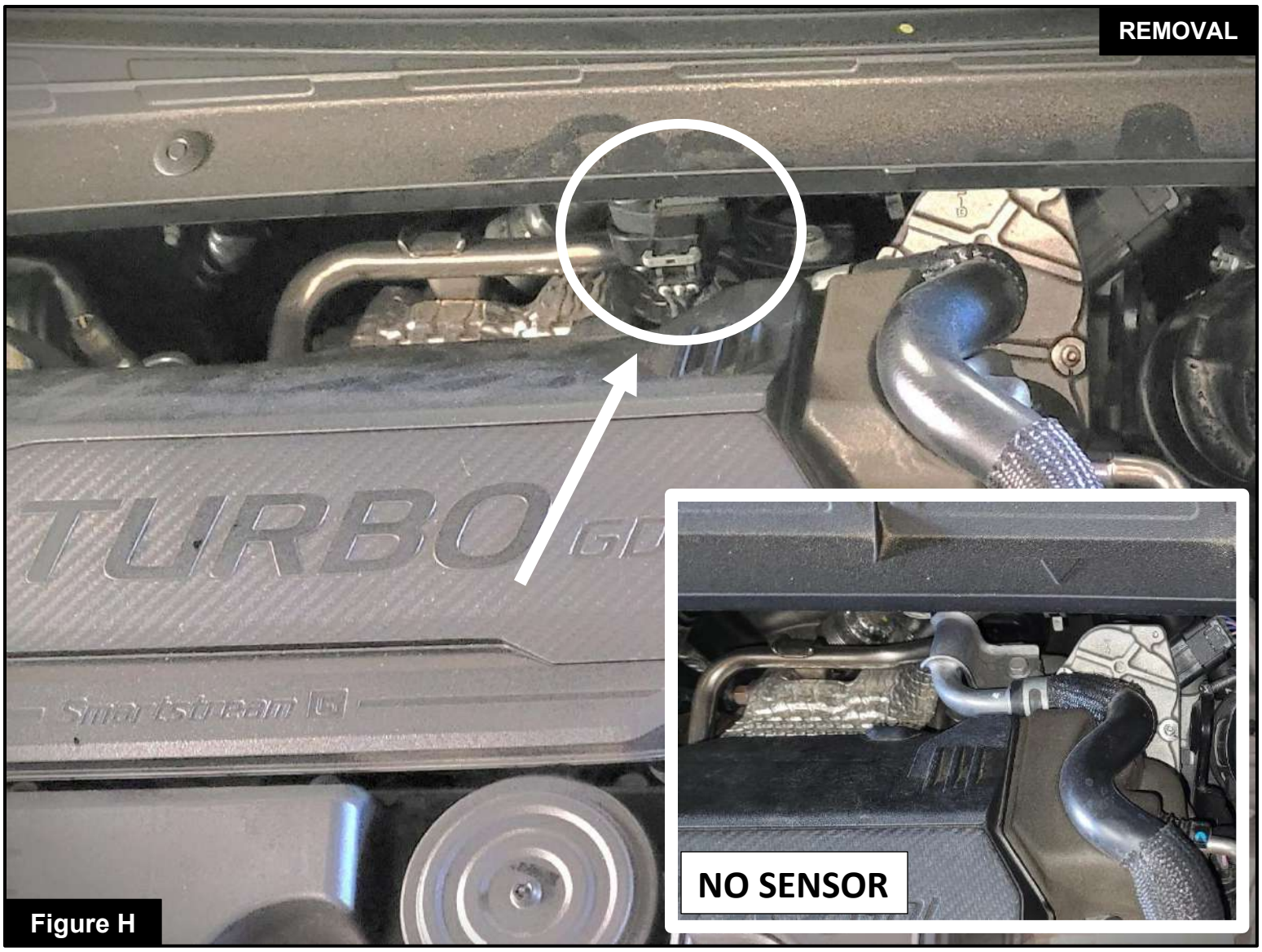

Figure H

Refer to Figure H for Steps 14-15

Step 14:2024+ vehicles are equipped with a crankcase ventilation sensor. If your vehicle does not have this sensor, skip to **Step 21**.

Step 15:If your vehicle is equipped with a crankcase ventilation sensor, continue with the following steps to help prevent diagnostic trouble code **P04DB (Crankcase Ventilation System Disconnected)** after installing the **TAKEDA Intake System.**

Figure J

Refer to Figure J for Step 16

Step 16:Carefully disconnect the electrical harness to provide enough room to access the hose behind it.

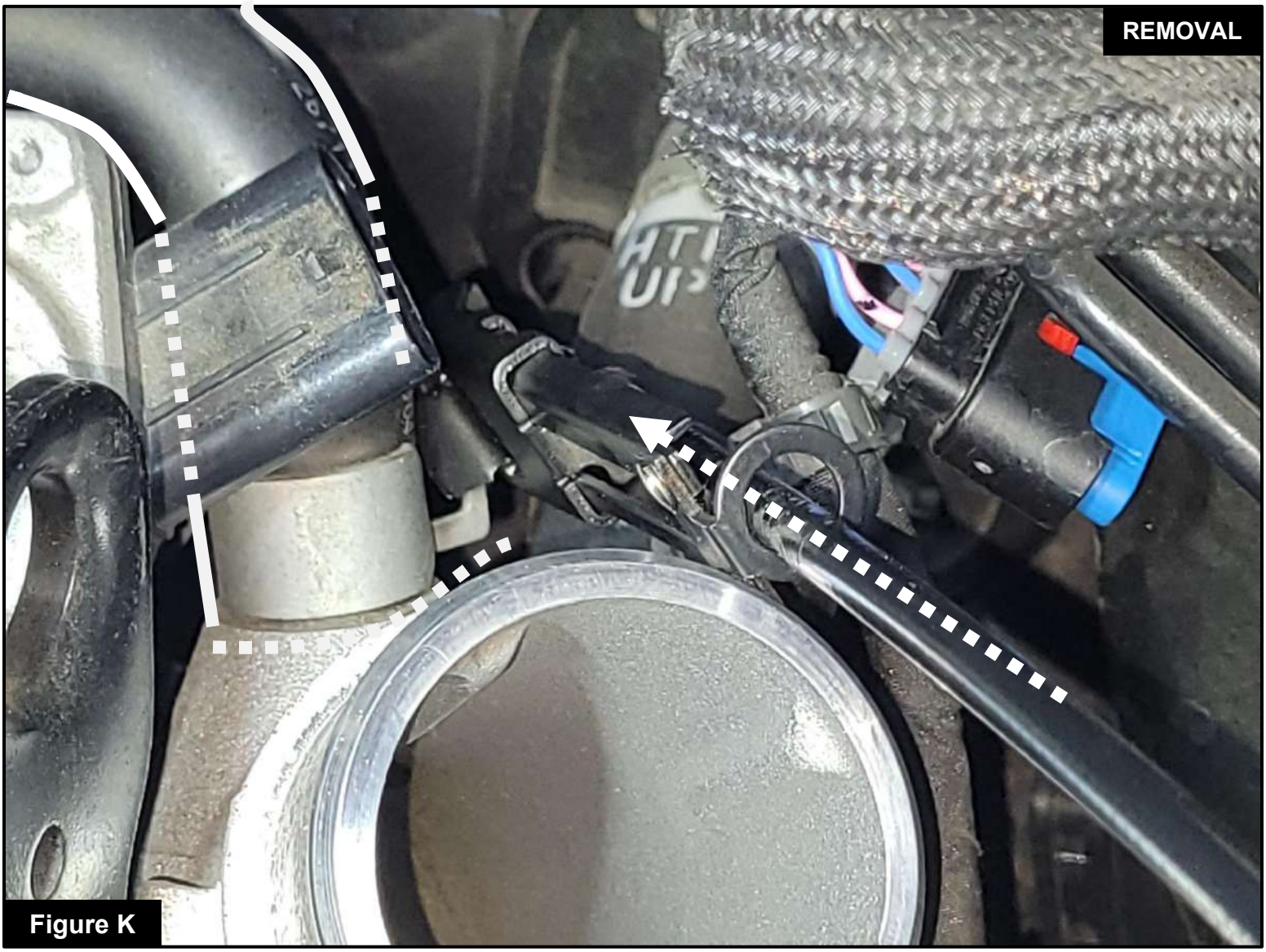

Figure K

Refer to Figure K for Step 17

Step 17:Use pliers to loosen the hose clamp and slide it upward, then disconnect the hose. Flexible spring hose clamp pliers can make this step easier.

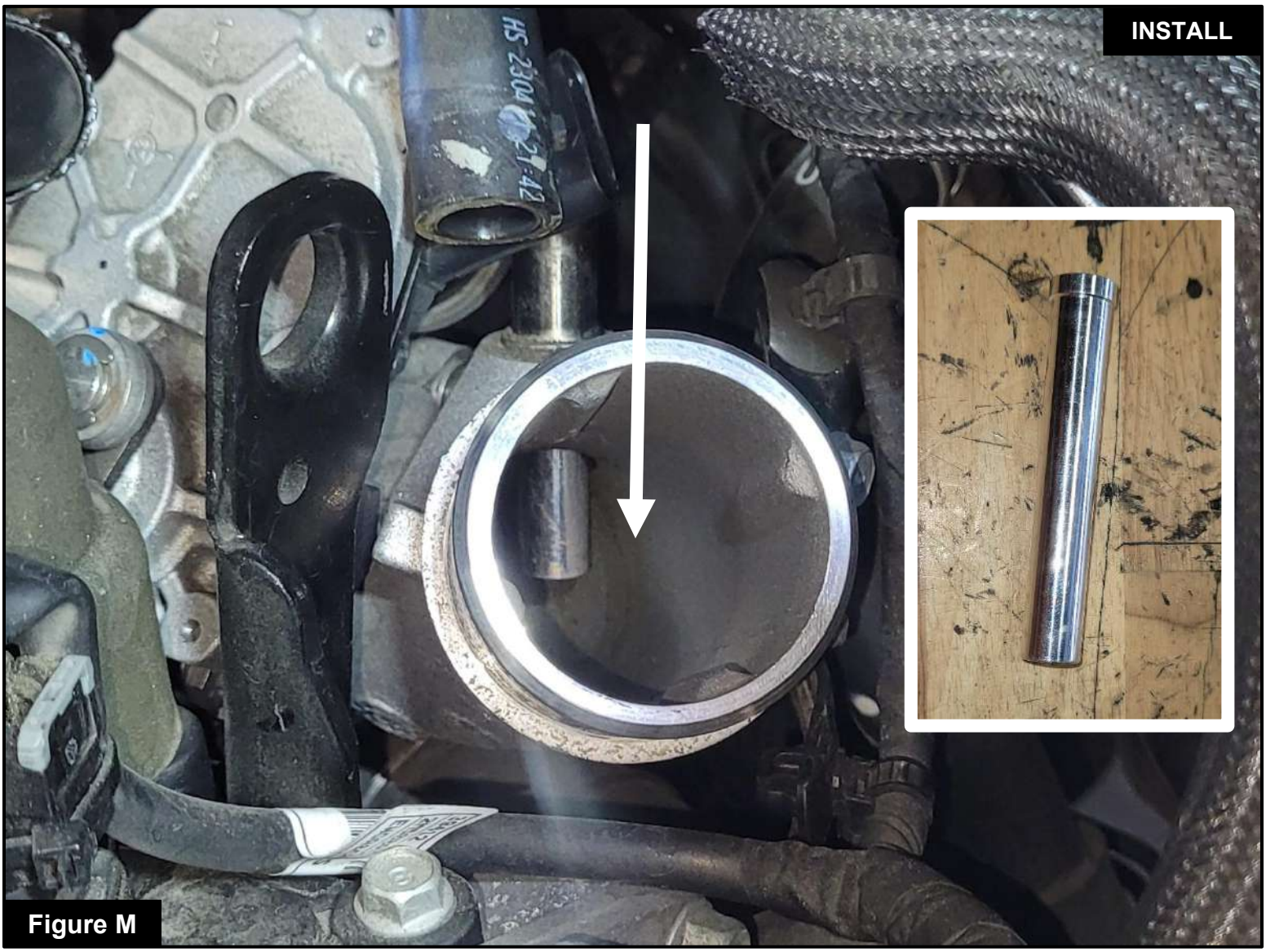

Figure M

Refer to Figure M for Step 18

Step 18:Insert the provided aluminum vent insert into the fitting. Do not force it in; the insert should slide in freely to a fixed depth.

Figure N

Refer to Figure N for Steps 19-20

Step 19:Slide the hose removed in **Step 15** back onto the fitting and aluminum vent insert. Secure it with the hose clamp.

Step 20:Connect the electrical harness.

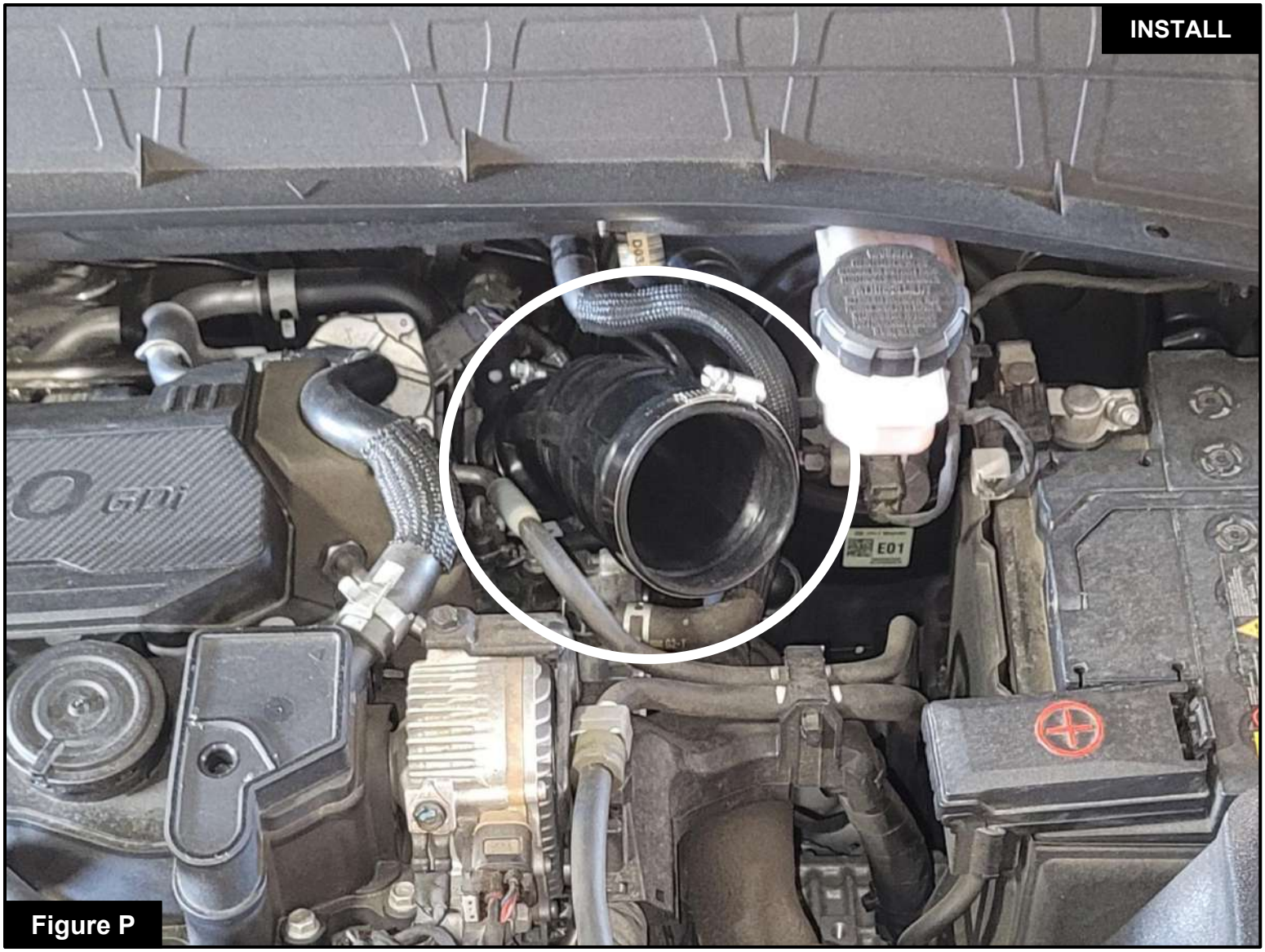

Figure P

Refer to Figure P for Steps 21-23

Step 21:Install the **#032** clamp over the small end of the **aFe POWER** coupler. Do not tighten at this time.

Step 22:Install the small end of the coupler onto the turbo inlet and orient the coupler and clamp as shown. Do not tighten clamp at this time.

Step 23:Install the **#48** clamp onto the large end of the coupler and orient it as shown. Do not tighten it at this time.

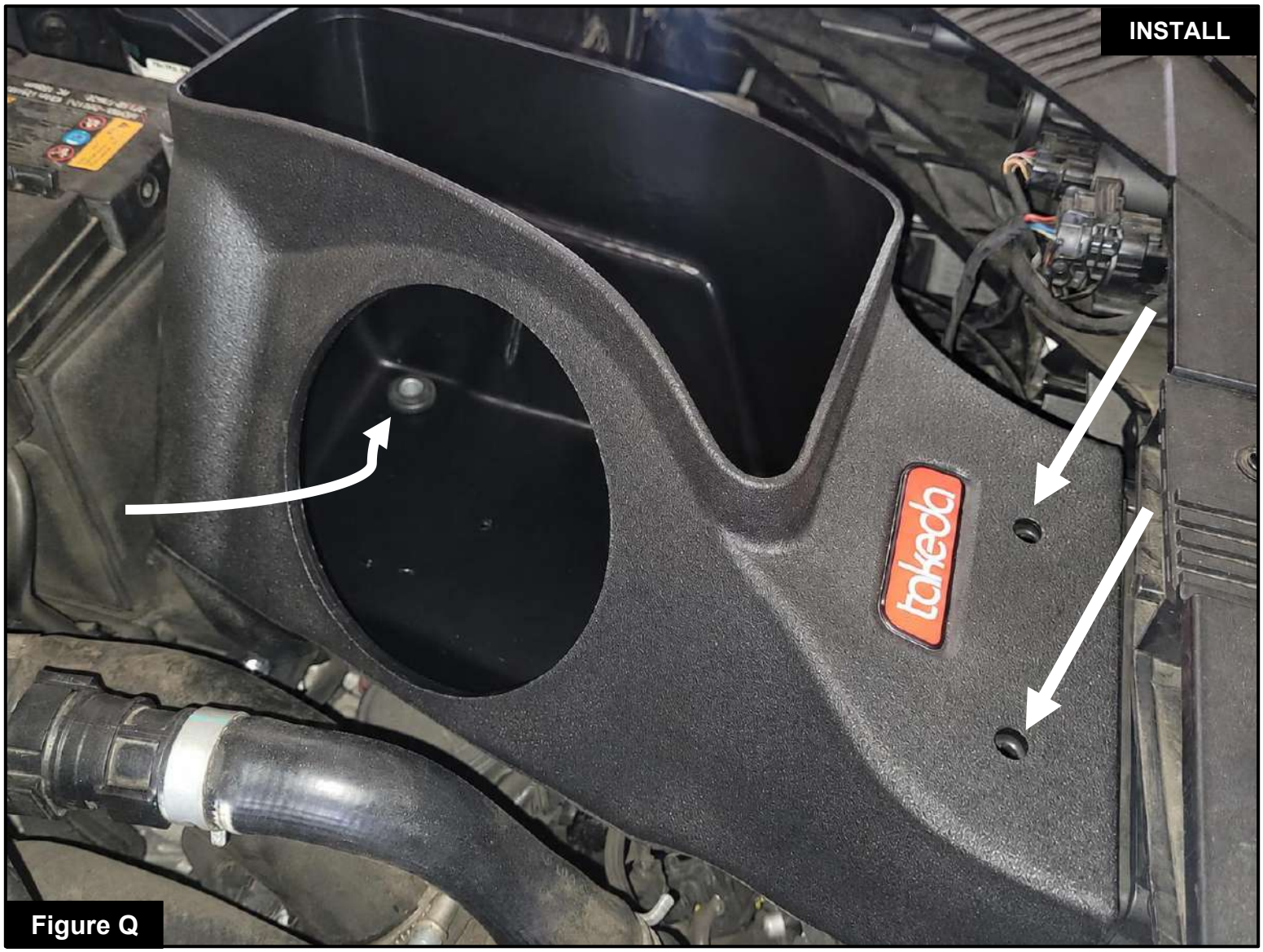

Figure Q

Refer to Figure Q for Steps 24-26

Step 24:Install the **TAKEDA** housing into the vehicle, making sure the mounting holes line up.

Step 25:Use one of the 10mm screws removed in **Step 6** to secure the **TAKEDA** housing. The screw installs from inside the **TAKEDA** housing.

Step 26:Install factory retaining clips, that were removed in **Step 1**, into housing mounting holes.

Figure R

Refer to Figure R for Steps 27-30

Step 27:Install the **aFe POWER** filter and clamp into the **TAKEDA** housing until the locking tabs engage. Make sure the filter rotates freely. Do not tighten the clamp at this time.

Step 28:Install the **TAKEDA** intake tube by sliding it into the air filter first, then into the silicone coupler. Do not tighten clamp at this time.

Step 29:Push the recirculation hose onto the bottom fitting until it clicks into place. Make sure the hose is not kinked

Step 30:Adjust the coupler and **TAKEDA** tube orentation for best fitment.Use an 8mm driver or socket wrench to tighten all clamps securing the **TAKEDA** intake tube in place.

Figure S

Refer to Figure S for Steps 31-33

Step 31:Connect both quick-connect hoses to the ejector fitting until the side tabs click securely into place.

Step 32:Connect the sensor electrical harness from the ejector fitting.

Step 33:Connect the PCV hose to the **TAKEDA** intake tube.

Figure T

Refer to Figure T for Step 34

Step 34:Install the provided seal trim. For the best appearance, begin installation at the middle section near the filter. Work your way around the housing and finish at the same location so the seam remains centered near the filter.

Your installation is now complete. Thank you for choosing TAKEDA USA!

NOTE: Check to ensure that all screws, clamps, and connectors are secure after 100-200 miles.

PAGE LEFT BLANK INTENTIONALLY

PAGE LEFT BLANK INTENTIONALLY

PAGE LEFT BLANK INTENTIONALLY

advanced FLOW engineering, inc.
Corona, CA 92879
https://afepower.com/contact-us