Installation Instructions

6" Performance Suspension System

2002-2005 Dodge 1500 4WD

Fabtech Motorsports
4331 Eucalyptus Ave. Chino, CA 91710
Tech Line 909-597-7800 Fax 909-597-7185 Web www.fabtechmotorsports.com

www.fabtechmotorsports.com

6" 2002-2005 Dodge 1500 4WD
FTS23002BK / FTS23003BK

TOOL LIST: (NOT INCLUDED)

- **FLOOR JACK & JACK STANDS**
- **ASSORTED METRIC AND S.A.E SOCKETS & WRENCHES**
- **SPECIALTY PRODUCTS, #40940 (Bushing removal tool) www.spcalignment.com 1-800-525-6505**
- **TORQUE WRENCH**
- **DIE GRINDER WITH CUT OFF WHEEL AND GRINDING WHEEL**
- **LARGE DEAD BLOW HAMMER**
- **TORSION BAR REMOVAL TOOL**

SOME MODELS WILL NEED EXHAUST MODIFICATION TO CLEAR THE FRONT DRIVE SHAFT. IF YOUR TRUCK HAS THE EXHAUST UNDER THE FRONT DRIVE SHAFT IT WILL NEED MODIFICATION TO CLEAR THE FRONT DRIVE SHAFT.

FACTORY WHEELS CANNOT BE REINSTALLED WITH THIS KIT. 18'' OR LARGER WHEELS ARE REQUIRED WITH A MAXUMUM BACK SPACING OF 4.5''.

READ ALL INSTRUCTIONS THOROUGHLY FROM START TO FINISH BEFORE BEGINNING INSTALLATION! IF THESE INSTRUCTIONS ARE NOT PROPERLY FOLLOWED, SEVERE FRAME, DRIVELINE AND / OR SUSPENSION DAMAGE MAY RESULT.

CHECK ALL PARTS INCLUDED IN THIS KIT TO THE PARTS LIST ABOVE BEFORE BEGINNING INSTALLATION OF THIS KIT. IF ANY PARTS ARE MISSING, CONTACT FABTECH AT 909-597-7800.

NOTE- PRIOR TO THE INSTALLATION OF THIS SUSPENSION SYSTEM, A FRONT END ALIGNMENT MUST BE PERFORMED AND RECORDED. DO NOT INSTALL THIS SYSTEM IF THE VEHICLE ALIGNMENT IS NOT WITHIN FACTORY SPECIFICATIONS. CHECK FOR FRAME AND SUSPENSION DAMAGE PRIOR TO INSTALLATION. THIS SUSPENSION SYSTEM DOES NOT REQUIRE WELDING FOR INSTALLATION. DO NOT WELD ANY OF THESE COMPONENTS.

VEHICLES THAT WILL RECEIVE OVERSIZED TIRES SHOULD CHECK BALL JOINTS, TIE RODS ENDS AND RACK & PINION EVERY 2500-5000 MILES FOR WEAR AND REPLACE AS NEEDED.

DO NOT ALTER THE FINISH OF THESE COMPONENTS, EXAMPLE- CHROMING, ZINC PLATING OR PAINTING. CHANGING THE FINISH CAN CAUSE STRUCTURAL FATIGUE OF COMPONENTS.

THIS SYSTEM MUST BE INSTALLED WITH FABTECH SHOCK ASBORBERS TO PREVENT POSSIBLE BALL JOINT & CV DAMAGE.

THE INSTALLATION OF THIS SUSPENSION SYSTEM SHOULD BE PERFORMED BY TWO PROFESSIONAL MECHANICS.

THIS SUSPENSION SYSTEM IS DESIGNED TO FIT FOUR (4WD) MODELS ONLY!
SYSTEM WILL NOT WORK ON ALL WHEEL DRIVE (AWD) MODELS

VERIFY DIFFERENTIAL FLUID IS AT MANUFACTURES RECOMMENDED LEVEL PRIOR TO KIT INSTALLATION. INSTALLATION OF THE KIT WILL RE-POSITION THE DIFFERENTIAL AND THE FILL PLUG HOLE MAY BE IN A DIFFERENT POSITION. (FOR EXAMPLE, IF THE MANUFACTURE RECOMMENDS 3 QUARTS OF FLUID, MAKE SURE THE DIFF HAS 3 QUARTS OF FLUID). CHECK YOUR SPECIFIC MANUAL FOR CORRECT AMOUNT OF FLUID.

6" 2002-2005 Dodge 1500 4WD
FTS23002BK / FTS23003BK
Parts List / Hardware

	FTS23002BK	Box Kit 1
Qty	**Part #**	**Description**
1	FTS44115D	Driver Steering Knuckle
1	FTS44115P	Pass Steering Knuckle
1	FT44019BK	Skid Plate
1	FT44020	Pass. Diff Mount Part 1
1	FT44026	Pass. Diff Mount Part 2
1	FT44021	Driver Diff Mount Part 1
1	FT44027	Driver Diff Mount Part 2
1	FT44022	Driver Rear Diff Mount
1	FT44109	Hdwr Sub-Assembly Kit
1	FT44014	Hardware Kit
1	FT44033	Hardware Kit

	FT44109	Hardware Sub-Assembly
Qty	**Part #**	**Description**
2	FT404094	Shock Sleeve
2	FT23002i	Instruction Sheet
1	FTAS16	Driver Warning
1	FTAS12	Fabtech Sticker
1	FTREGCARD	Reg. Card

	FTS23003BK	Box Kit 2
Qty	**Part #**	**Description**
1	FT44011BK	Frt. Crossmember
1	FT44224BK	RR Crossmember W/ Bushings
2	FT44015	Aluminum Frame Insert
1	FT44024BK	Frt. Bump Stop Drv.
1	FT44025BK	Frt. Bump Stop Pass.
2	FT44016	Tie Rod End
1	FT44040BK	Sway Bar End Link Frt. Drv
1	FT44041BK	Sway Bar End Link Frt. Pass
4	FT50013	Sway Bar U-Bracket
1	FT44111	Hdwr Sub-Assembly Kit
1	FT44043	Pass Sway Bar Frame Mount
1	FT44044	Driver Sway Bar Frame Mount
2	FT44017BK	Impact Tubes
2	FT44018BK	Impact Tube Mounts
2	FT44013BK	Torsion Bar Drop
1	FT44029	Front Drive Shaft Spacer
2	FT44056	2 Pin Add-a-Leaf

	FT44111	Hardware Sub-Assembly
Qty	**Part #**	**Description**
2	CB-06X5	Center Pin
1	FT1044	Bushing Kit
2	FT44034	Impact Tube Mounts Nut Tab
1	FT50048	End Link Bushing Kit
1	FT50089	End Link Sleeve Kit
2	FT7100-6-100	Torsion Bar Sleeve
2	FTS88	Bump Stop
2	37240003952	Center Pin Nut

	FT44033 Hardware Kit		
Qty	**Description**		
2	1/2"-13 x 4 1/4" Hex Bolt	4	1/2"-13 x 3" Button Head Bolt
2	7/16"-14 x 4" Hex Bolt	6	3/8"-16 Nyloc Nut
2	3/8"-16 1 1/2" Hex Bolt	8	3/8" SAE Flat Washer
4	5/16"-18 x 1 1/2" Hex Bolt	4	3/8" USS Flat Washer
2	7/16"-14 x 1" Hex Bolt	7	1/2"-13 Nyloc Lock
1	1/2"-13 x 1 1/4" Hex Bolt	14	7/16"-14 Nyloc Nut
1	1/2"-13 x 2 3/4" Hex Bolt	4	5/16"-18 Nyloc Nut
4	7/16"-14 x 3 1/2" Hex Bolt	15	1/2" SAE Flat Washer
4	7/16"-14 x 1 1/4" Hex Bolt	30	7/16" SAE Flat Washer
4	7/16"-14 x 1 1/4" Hex Bolt	8	5/16" SAE Flat Washer

	FT44014 Hardware Kit
Qty	**Description**
4	1/2"-13 x 2 3/4" Hex Bolt
4	1/2"-13 x 2 1/2" Hex Bolt
3	9-16"-12 x 2 1/4" Hex Bolt
2	5/8"-11 x 5" Hex Bolt
2	5/8"-11 x 4.5" Hex Bolt
8	1/2"-13 Crown Lock
3	9/16"-12 Crown Lock
4	5/8"-11 Crown Lock
16	1/2" SAE Flat Washer
6	9/16" SAE Flat Washer
8	5/8" SAE Flat Washer
4	12mm-1.75 x 45mm
4	12mm Flat Washer
1	Lock Tight

FRONT SUSPENSION INSTRUCTIONS:

1. Disconnect the negative terminal on the battery. With the vehicle on level ground set the emergency brake and block the rear tires. Measure the front ride height of the truck from hub center of the wheel to the top of the fender well. RECORD THIS MEASUREMENT BELOW FOR LATER USE**.**

   Driver Frt. _____" Passenger Frt._____"

2. Jack up the front end of the truck and support the frame rails with jack stands. **NEVER WORK UNDER AN UNSUPPORTED VEHICLE!** Remove the front tires.

3. Locate the torsion bar adjusting cams and threaded bolts. Measure exposed threads of torsion bar adjusting bolts and record for reinstallation. **IT IS IMPEARATIVE THAT THE TORSION BARS BE RESET AT THIS HEIGHT FOR PROPER CV SHAFT ANGLES. VEHICLE MIGHT INCURR VIBRATIONS AND CV AXLE FAILURE IF SET AT A HIGHER OR LOWER POSITION.** Mark torsion bars indicating driver and passenger. Using a torsion bar removal tool unload the torsion bars and remove. Retain the hardware for reinstallation. NOTE- Do not attempt to unload or remove torsion bars without the proper torsion bar tool. **TORSION BARS ARE UNDER EXTREME SPRING LOAD!**

4. Remove the factory transfer case skid plate and discard.

5. Disconnect the front drive shaft from the differential and discard the hardware.

6. Remove the front shocks and discard. Save the lower shock hardware and discard the upper hardware.

7. Locate the sway bar end links and disconnect them from the lower control arms and the sway bar. Discard the end links and hardware. Remove the factory sway bar from the truck and save along with the frame mount hardware.

8. Working from the driver side of the vehicle, disconnect the tie rod ends from the steering knuckle by striking the knuckle to dislodge the tie rod end. Use care not to damage the tie rod end when removing. Discard the hardware as a new Fabtech tie rod end will be installed later. SEE PHOTO IN NEXT COLUMN.

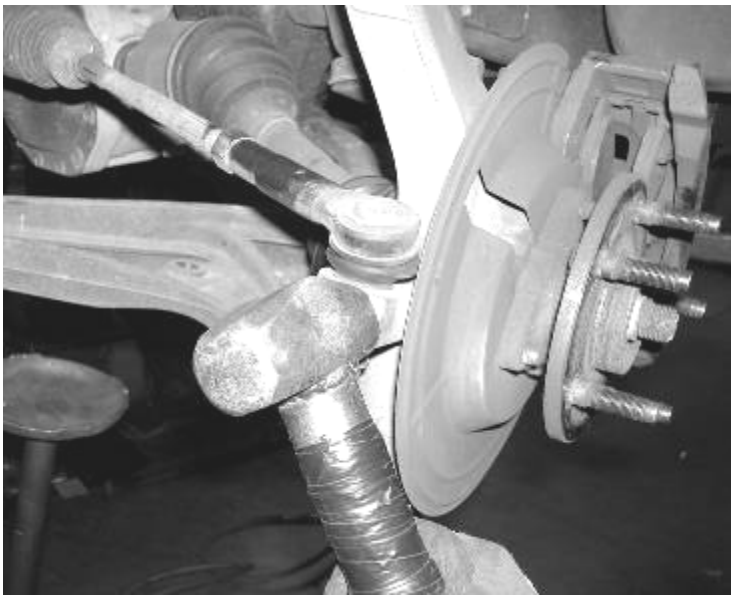

9. Remove the brake caliper and place it next to the frame. Do not overstretch the brake hose when doing so. **DO NOT LET THE BRAKE CALIPER HANG FROM THE BRAKE HOSE.** Retain the hardware for reinstallation. Remove the brake rotor and save. Unplug the ABS wire at the plug behind the inner fender well and remove the ABS line clamp were it is attached to the spindle.

10. Remove the axle nut from the center of the hub and save.

11. Remove the upper and lower ball joint nuts and save. Using a large hammer strike the spindle to dislodge the ball joints from the spindle. **USE CARE NOT TO DAMAGE THE THREADS ON THE BALL JOINTS.** Remove the spindle from the truck.

12. Remove the bolts attaching the hub bearing to the spindle and save. Remove hub assembly along with the ABS sensor wire and dust shield from the spindle as one and save. **NOTE; Do not disconnect the ABS sensor from the hub at anytime.** Discard the spindle.

13. Remove the factory lower control arm bolts and save. Remove the lower control arm and save.

14. Remove the C.V. half shaft from the differential. This can be done by using a rubber mallet and striking the backside of the inner C.V. joint housing. Save the half shaft.

15. Repeat steps eight through fourteen on the passenger side of the truck.

16. Remove the factory rear crossmember from the truck and discard the crossmember and hardware. SEE PHOTO ON NEXT PAGE.

17. Support the differential with a floor jack or transmission jack, remove the differential from the truck. Save the hardware from the driver rear differential mount and discard the rest.

18. Locate the driver side rear lower control arm mount where the factory rear crossmember was previously removed. As shown in the picture below cut a 1” section from the frame. SEE PHOTOS BELOW AND IN NEXT COLUMN.

View shown looking from front to rear

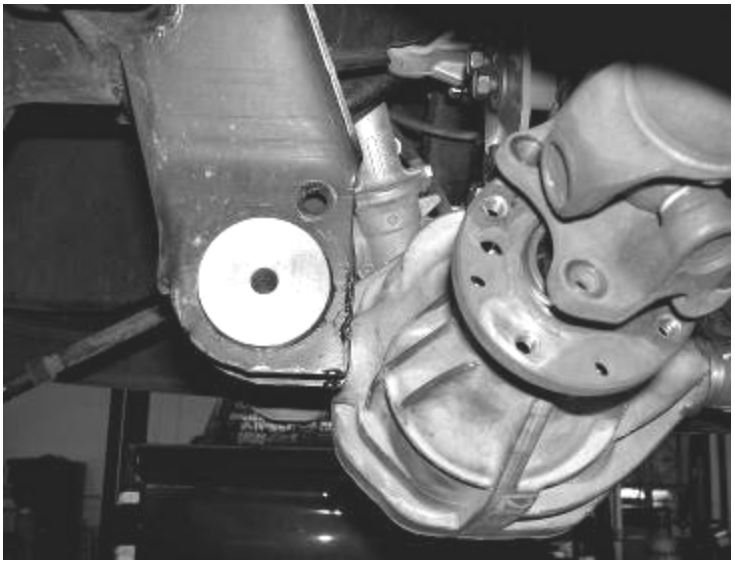

View shown looking from rear to front

19. Locate the factory front lower control arm pockets. Grind ¼” section from both pockets as shown in the photo. SEE PHOTO BELOW.

20. Locate FT44020 and FT44026 passenger side diff mounts. Using the supplied ½” X 2 ¾” hardware attach the brackets to the differential as shown in the diagram. Leave loose at this time. SEE THE DIAGRAM ON THE LAST PAGE.

21. Locate FT44021 and FT440027 Driver front diff mounts. Using the supplied ½”X 2 ½” hardware attach the brackets to the differential as shown in the diagram. Leave loose at this time. SEE THE DIAGRAM ON THE LAST PAGE.

22. Locate FT44022 Driver rear diff mount. Using the original hardware attach the bracket to the original frame mount. Leave loose at this time. SEE THE DIAGRAM ON THE LAST PAGE.

23. Install the differential back into the truck attaching the new Fabtech drop brackets to the frame mounts. Use the supplied ½” x 2 ¾” bolts, nuts, and washer on the passenger side bracket, use the supplied ½” x 2 ½” bolts, nuts, and washers on the driver side front bracket, and use

the supplied 9/16” X 2 ¼” bolt, nuts, and washer on the driver rear brackets. Torque all differential hardware to 85 ft lbs.

24. Locate the factory rear lower control arm bushing in the frame. Use the specialty tool from **Miller Tool Company**, press each bushing out of the frame. Discard the bushing.

25. Locate the supplied FT44015 aluminum frame inserts. Install one into each factory rear lower control arm bushing holes. These can be installed into the frame using a large dead blow hammer. SEE PHOTOS BELOW.

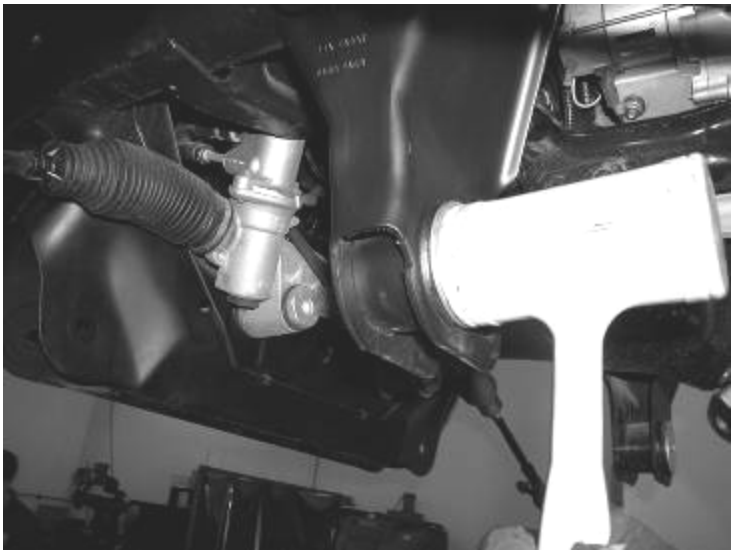

26. Locate FT44011 front crossmember and install it into the front lower control arm pockets using the supplied 5/8” x 5” bolts, nuts, and washers. Leave loose at this time.

27. Locate FT44224BK rear crossmember and install it onto the new aluminum frame inserts previously installed using the 5/8” x 4 ½” bolts, nuts, and washers. Leave loose at this time.

28. Locate the factory bump stop mount on the frame and remove the original bump stop. Using a die grinder with a grinding bit, open the hole on the top of the mount to 1 ½” x 1 ½” square. SEE PHOTO IN NEXT COLUMN.

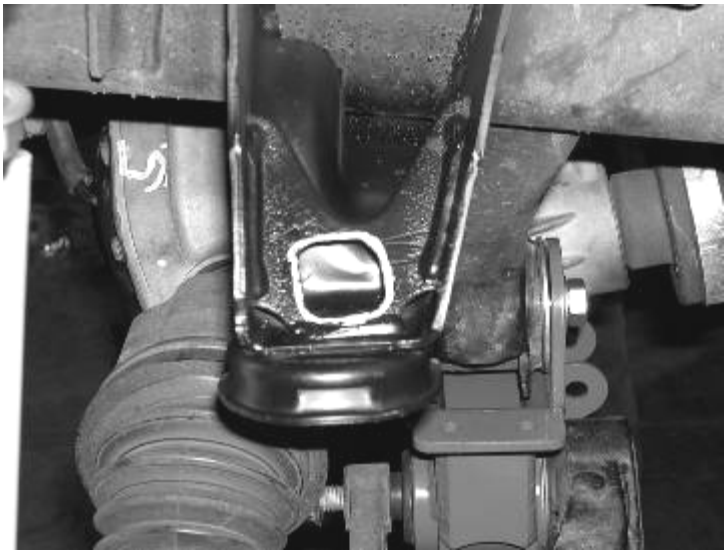

29. Locate FT44024 (driver) front bump stop mount. Using the supplied 5/16” X 1 ½” bolts, nuts, and washer attach the mount to the rear crossmember. Using the supplied 7/16” X 1” bolt and washer attach the upper part of the mount to the frame were the factory bump stop was previously mounted Torque the 7/16” bolt to 50 ft. lbs. and the 5/16” bolts to 18 ft. lbs. Install the supplied low profile bump stop to the bottom of the new mount. **NOTE: On some models you will need to drill out the factory hole in the factory bump stop mount to 7/16”.** SEE PHOTO BELOW.

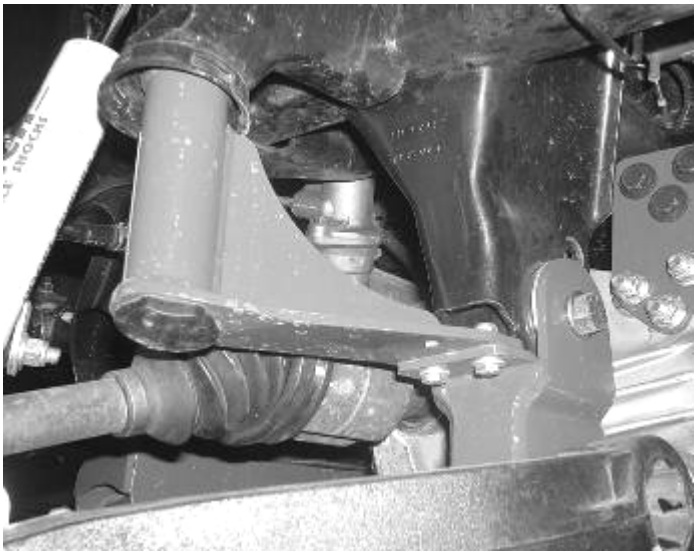

30. Working from the driver side of the truck, install the factory lower control arm to the Fabtech crossmembers using the original hardware. The large factory Torx bolt goes into the rear lower control arm pivot. Leave loose at this time.

31. Install the C.V. half shaft back onto the differential by pushing the half shaft onto the splines until the snap ring locks.

32. Locate FT44115D (driver) Steering Knuckle. Attach the previously removed hub bearing to the knuckle in the same

position as when removed using the original hardware and a small amount of the supplied thread locking compound on each bolt. Torque to 95 ft. lbs.

33. Attach the steering knuckle to the lower ball joint first, then slide the C.V. shaft end through the hub bearing, followed by the upper ball joint to the steering knuckle. Torque the lower ball joint nut to 85 ft lbs and the upper ball joint nut to 50 ft lbs. Using the original C.V. axle nut attach the C.V. axle to the hub assembly. Torque to 100 ft lbs.

34. Locate FT44019 skid plate and attach to the front crossmember using the supplied ½" X 2 ¾" bolt, nut, and washer, and to the rear crossmember using the supplied ½" X 1 ¼" bolt and washer. SEE PHOTO BELOW.

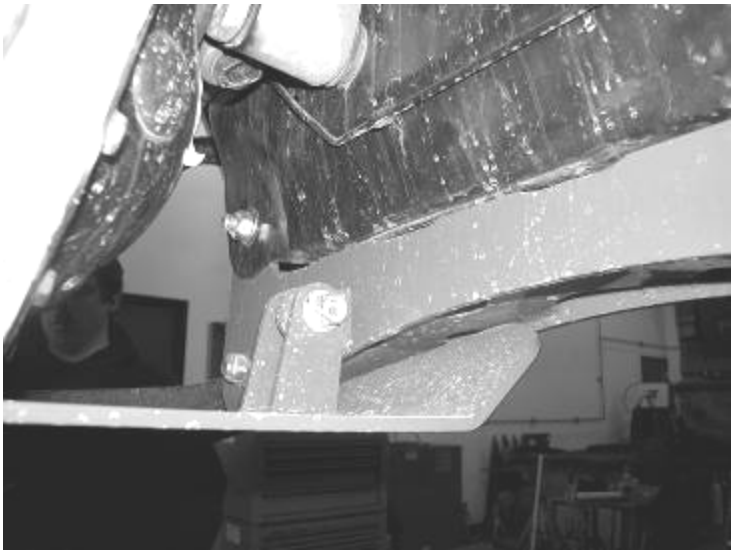

35. Torque the Fabtech crossmember bolts to 100 ft lbs and control arm pivot bolts to 110 ft. lbs.

36. Install the factory brake rotor and caliper. Use a small amount of the supplied thread lock compound on the caliper bolts and torque to 145 ft. lbs.

37. Locate FTS7159 front shocks (not included in the kit) and install onto the truck. Torque the upper mount to 20 ft lbs. and the lower mount to 35 ft lbs.

38. Using a measuring tape, measure the amount of threads showing from the tie rod end in. **RECORD THIS MEASUREMENT.** Loosen the jam nut holding the outer tie rod end on and remove the out tie rod end and discard. Leave the jam nut on the inner tie rod end.

39. Locate FT44016 tie rod end and thread it onto the factory inner tie rod end to the measurement recorded earlier. **Note: This is just a starting point, the toe adjustment will need to be set during the final alignment.** Tighten the jam nut up to the tie rod end. Attach the tie rod end to the spindle using the supplied 14mm nut. Torque to 85 ft lbs. SEE PHOTO IN NEXT COLUMN.

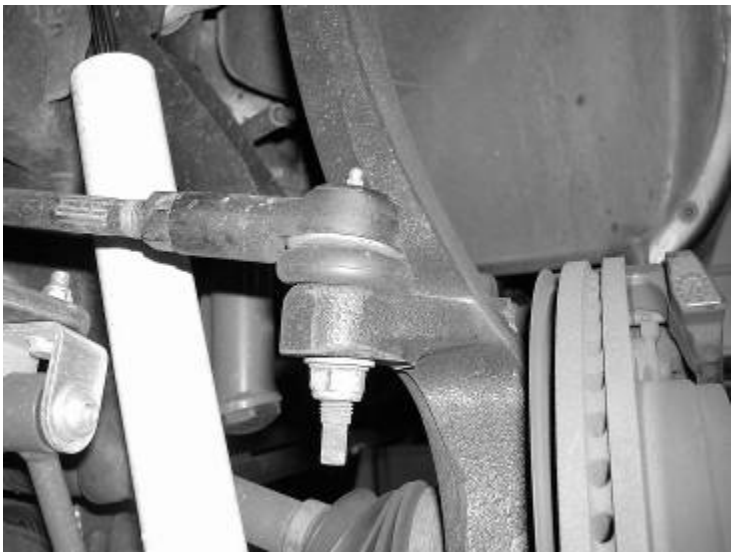

40. Repeat steps thirty through thirty-nine on the passenger side of the truck.

41. Locate FT44029 front drive shaft spacer. Using the supplied 12mm bolts, and washer attach the spacer and drive shaft to the front differential. Torque to 75 ft. lbs. SEE PHOTO BELOW.

42. Locate FT44044 (driver) FT44043 (pass) sway bar frame mounts. Attach the mounts to the frame using the original factory hardware. Leave loose. Attach the sway bar to the new brackets using the supplied 7/16" X 1 ¼" bolts, nuts, and washers. Torque all sway bar hardware to 55 ft. lbs. The sway bar should be offset forward a slight amount with the installation of the frame brackets. SEE PHOTO ON NEXT PAGE.

43. Locate FT44040 & FT44041 (driver & passenger) sway bar end links. Press one bushing and one sleeve into each end of the links.

44. Locate FT50013 sway bar u-brackets. Attach one to each end of the end links using the supplied ½" X 3" button head bolts, nuts, and washers. SEE DIAGRAM BELOW.

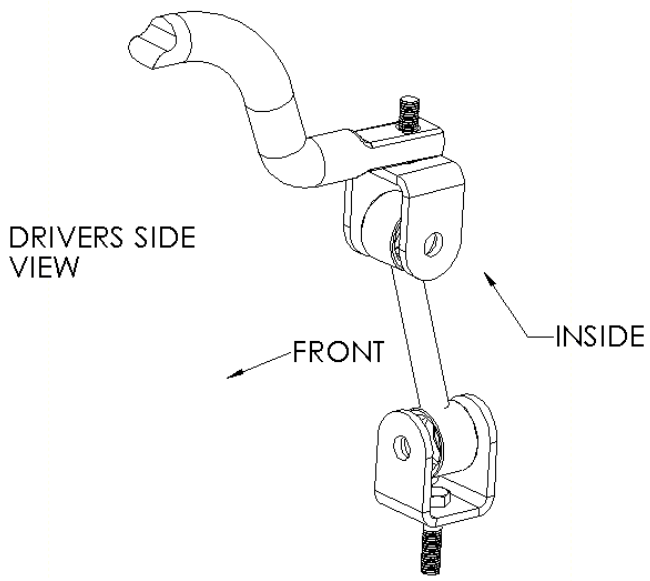

45. Using the supplied 3/8" nuts and washers attach the sway bar end links to the sway bar and the lower control arm. **At times this may be easier to attach when the truck is completed and on the ground**. SEE PHOTO BELOW

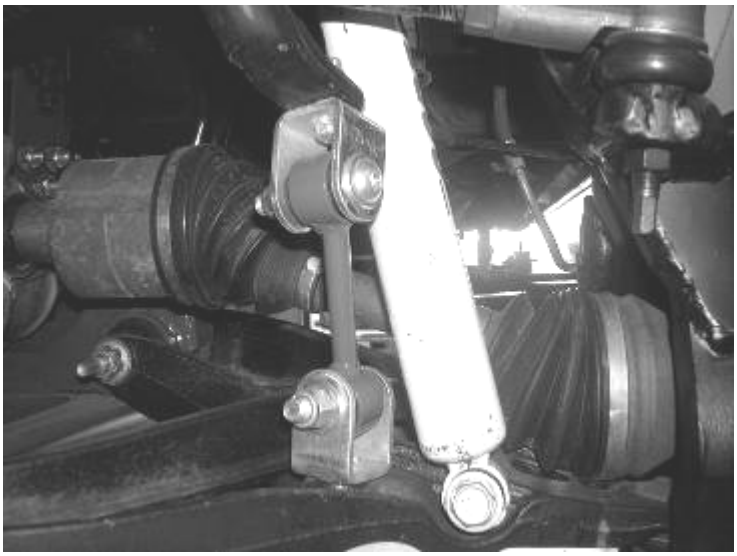

Driver Side Shown.

46. Locate FT44013 torsion bar drop bracket along with FT7100-6-100 frame sleeve. Locate the new drop bracket below the factory mount, aligning the new bracket against the frame **(the Fabtech drop bracket mounts with the front leg of the bracket against the outside of the frame mount. The rear leg on the Fabtech bracket mounts on the inside of the frame bracket).** Insert the sleeve into the factory bolt location as shown below. Use the supplied ½" X 4 ¼" bolt, nut, and washer on the factory frame mounts with the sleeve. Leave loose at this time. Repeat on the passenger side of the truck at this time. SEE PHOTO BELOW.

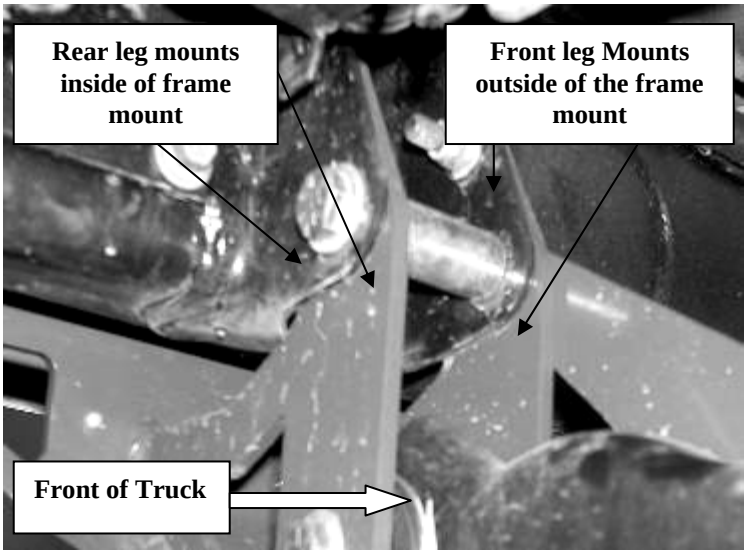

Photo of Driver's Side.

47. Using the supplied 7/16" X 4" bolts, nuts, and washers attach the factory crossmember to bracket mounts. Leave loose at this time. Using a drill with a 3/8" drill bit, drill the hole for the front mounting tab. Using the supplied 3/8" bolts, nuts, and washers attach it to the frame. Torque the ½" bolts to 80 ft. lbs, the 7/16" bolts to 60 ft. lbs, and the 3/8" bolts to 35 ft. lbs.

48. Locate the FT44017 impact strut tubes and install two bushings from the supplied bushing kit into each end of the tubes.

49. Using the supplied 7/16” x 3 ½” bolts, nuts and washers attach the impact tubes to the rear crossmember tabs. Leave bolts loose at this time.

50. Attach FT44018 impact tube mounts to the free end of the impact tubes using the supplied 7/16” x 3 ½” bolts, nuts, and hardware. Leave loose at this time.

51. Swing the strut tube with the rear mount bracket attached up to meet the transmission crossmember. With a center punch mark the hole and drill out to 7/16”. Using the supplied 7/16” x 1 ¼” bolts and washers along with the supplied FT44034 nut tab attach the bracket to the frame. Torque the rear mount bracket to 50 ft lbs, and the 7/16” impact tube bolts to 45 ft lbs. SEE PHOTO BELOW.

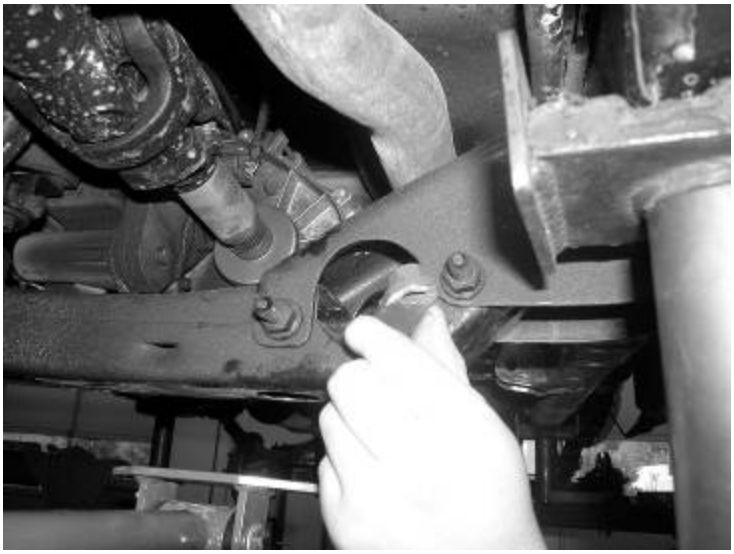

Photo Shown Installing The Nut Tab Into The Frame.

52. Reinstall the driver and passenger side torsion bars into the truck and reset to the previous recorded measured height.

53. Install front tires and wheels. Torque lug nuts to wheel manufacturers specifications

Double Check That All Nuts And Bolts Are Now Tight Before Proceeding To The Rear.

REAR SUSPENSION INSTRUCTIONS:

54. Jack up the rear end of the vehicle and support the frame rails with jack stands. Block the front wheels so the truck will not roll. Release the parking brake at this time. While supporting the rear differential remove the rear shocks, u-bolts, and lower axle down. Save the u-bolts and hardware, discard the shocks. **USE CARE NOT TO OVER EXTEND THE BRAKE LINES.**

55. Separate the springs and install the provided FT44056 add a leaf with the new center bolt in a pyramid pattern smallest on the bottom graduating to the longest on top. The factory flat overload leaf should remain on the bottom of the pack. **(Make sure that the Factory Locating Dowel Pin is aligned throughout the entire leaf pack when installing the new center pin)** Clamp the spring and tighten the center bolt as not to leave a gap between the springs. Cut the thread of the bolt smooth with the nut. The nut should be on the top of the leaf spring pack.

56. Using the factory U-bolts, nuts, and washers align the axle and springs and torque the U-Bolts to 90lbs.

57. Install the new Fabtech shocks (not included with the kit) and Torque to 65 lbs using factory hardware on both upper and lower mounts.

58. Recheck all bolts for proper torque. Recheck the front and rear brake hoses and ABS lines for proper clearances.

59. Install tires and wheels and torque lug nuts to wheel manufacturers specifications. Turn front tires left to right and check for appropriate tire clearance. Note-Some oversized tires may require trimming of the bumper and valance.

60. Check the front-end alignment and set to the factory specifications.

61. Check front differential fluid level due to CV Shaft removal.

62. Adjust the front headlights to the proper angle.

ITEM#	DESCRIPTION
1	FRONT DIFFERENTIAL
3	FT44022
5	FT44020
6	FT44026
7	FT44021
8	FT44027
9	FACTORY BOLTS

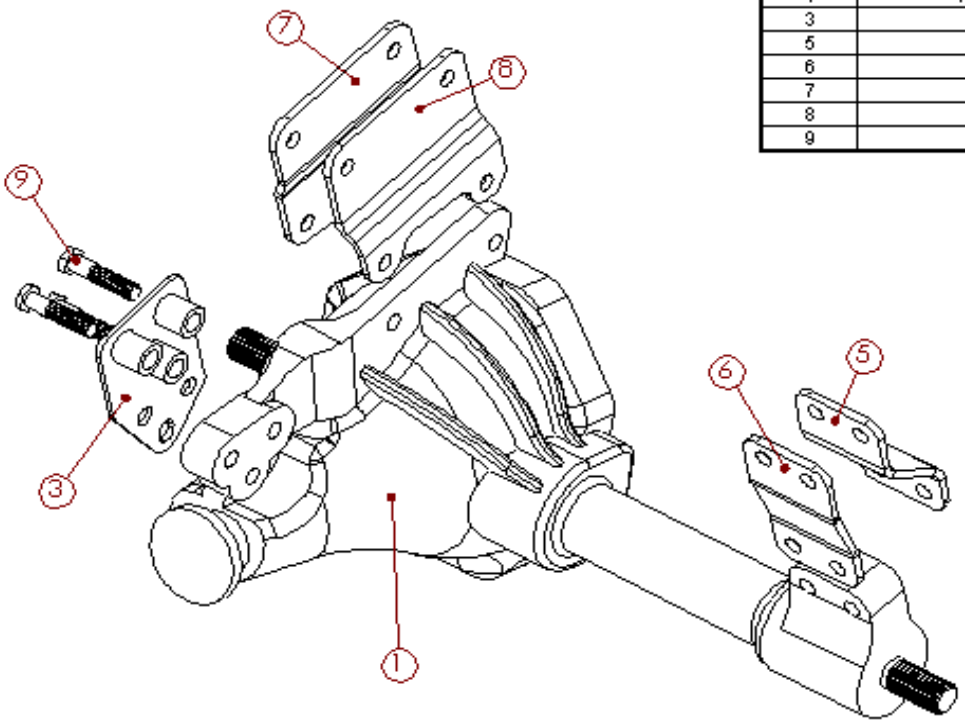

RETORQUE ALL NUTS, BOLTS AND LUGS AFTER 50 MILES AND PERIODICALLY THEREAFTER.

For technical assistance call: 909-597-7800

Product Warranty and Warnings-

Fabtech provides a Limited Lifetime Warranty to the original retail purchaser who owns the vehicle, on which the product was originally installed, for defects in workmanship and materials.

The Limited Lifetime Warranty excludes the following Fabtech items; bushings, bump stops, ball joints, tie rod ends, limiting straps, cross shafts, heim joints. These parts are subject to wear and are not considered defective when worn. They are warranted for 60 days from the date of purchase for defects in workmanship.

Take apart shocks are considered a serviceable shock with a one year warranty on leakage only. Service seal kits are available separately for future maintenance. All other shocks are covered under our Limited Lifetime Warranty.

Fabtech does not warrant any product for finish, alterations, modifications and/or installation contrary to Fabtech's instructions. Alterations to the finish of the parts including but not limited to painting, powdercoating, plating and/or welding will void all warranties. Some finish damage may occur to parts during shipping which is considered normal and is not covered under warranty.

Fabtech products are not designed nor intended to be installed on vehicles used in race applications or for racing purposes or for similar activities. (A "RACE" is defined as any contest between two or more vehicles, or any contest of one or more vehicle against the clock, whether or not such contest is for a prize). This warranty does not include coverage for police or taxi vehicles, race vehicles, or vehicles used for government or commercial purposes. Also excluded from this warranty are sales outside of the United States of America.

Installation of most suspension products will raise the center of gravity of the vehicle and will cause the vehicle to handle differently than stock. It may increase the vehicle's susceptibility to a rollover, on road and off road, at all speeds. Extreme care should be taken to operate the vehicle safely at all times to prevent rollover or loss of control resulting in serious injury or death. Fabtech front end Desert Guards may impair the deployment or operation of vehicles equipped with supplemental restraining systems/air bag systems and should not be installed if the vehicle is equipped as so.

Fabtech makes every effort to ensure suspension product compatibility with all vehicles listed in the catalog, but due to unknown auto manufacturers production changes and/or inconstancies by the auto manufacturer, Fabtech cannot be responsible for 100% compatibility, including the fitment of tire and wheel sizes listed. The Tire and Wheel sizes listed in Fabtech's catalog are only a guideline for street driving with noted fender trimming. Fabtech is not responsible for damages to the vehicle's body or tires.

Fabtech's obligation under this warranty is limited to the repair or replacement, at Fabtech option, of the defective product only. All costs of removal, installation or re-installation, freight charges, incidental or consequential damages are expressly excluded from this warranty. Fabtech is not responsible for damages and/or warranty of other vehicle parts related or non related to the installed Fabtech product. This warranty is expressly in lieu of all other warranties expressed or implied. This warranty shall not apply to any product that has been subject to accident, negligence, alteration, abuse or misuse as determined by Fabtech.

Fabtech suspension components must be installed as a complete system including shocks as shown in our current catalog. All warranties will become void if Fabtech parts are combined and/or substituted with other aftermarket suspension products. Combination and/or substitution of other aftermarket suspension parts may cause premature wear and/or product failure resulting in an accident causing injury or death. Fabtech does not warrant products not manufactured by Fabtech.

Installation of Fabtech product may void the vehicles factory warranty; it is the consumer's responsibility to check with their local vehicle's dealer for warranty disposition before the installation of the product.

It is the responsibility of the distributor and/or the retailer to review all warranties and warnings of Fabtech products with the consumer prior to purchase.

Fabtech reserves the right to supercede, discontinue, change the design, finish, part number and, or application of parts when deemed necessary without written notice. Fabtech is not responsible for misprints or typographical errors within the catalog or price sheet.