AIR LIFT PERFORMANCE®

INSTALLATION GUIDE

LEXUS GS300/GS350/GS430/ GS450H/GS460 (RWD)

FRONT APPLICATION

Kit 76042

For maximum effectiveness and safety, please read these instructions completely before proceeding with installation.

Failure to read these instructions can result in an incorrect installation which could result in damage to the vehicle, minor to severe personal injury or death.

MN-2033 • (012605) • ERN 10491

Scan the QR Code to learn more about your warranty.

TABLE OF CONTENTS

P.02
Introduction
Notation Explanation

P.03
System Overview
Hardware Content

P.04
Install the System
Important Safety Notices
Section 1. Prepare the Vehicle
Section 2. Stock Suspension Removal
Section 3. Install the Kit Components
Section 4. Route the Air Lines

P.10
Before Operating
Set the Ride Height
Torque Specifications
Suggested Driving Air Pressure
Maximum Air Pressure
Check for Binding
Installation Checklist
Damping Adjustment

Introduction

Air Lift Performance thanks you for purchasing the most complete, fully engineered high-performance air suspension made for the Lexus GS300/GS350/GS430/GS450H/GS460 (RWD). Read these installation instructions to correctly and safely set up the vehicle for a #lifeonair.

Air Lift assumes that the installer has the mechanical knowledge and ability to work on vehicle suspension systems and has basic tools necessary to complete a suspension replacement project. Special tools needed to complete the installation are noted on the System Overview page.

Air Lift reserves the right to make changes and improvements to its products and publications at any time. For the latest version of this manual, contact Air Lift Performance at **(800) 248-0892** or visit **www.airliftperformance.com.**

An Air Lift Performance air management system is highly recommended for this product. Learn more at **air-lift.co/productlines.**

NOTATION EXPLANATION

Hazard notations appear in various locations in this publication. Information highlighted by one of these notations must be observed to help minimize risk of personal injury or possible improper installation, which may render the vehicle unsafe. Notes are used to help emphasize areas of procedural importance and provide helpful suggestions. The following definitions explain the use of these notations as they appear throughout this guide.

DANGER — INDICATES IMMEDIATE HAZARDS WHICH WILL RESULT IN SEVERE PERSONAL INJURY OR DEATH.

WARNING — INDICATES HAZARDS OR UNSAFE PRACTICES WHICH COULD RESULT IN SEVERE PERSONAL INJURY OR DEATH.

CAUTION — INDICATES HAZARDS OR UNSAFE PRACTICES WHICH COULD RESULT IN DAMAGE TO THE VEHICLE OR MINOR PERSONAL INJURY.

NOTE — *Used to help emphasize areas of procedural importance and provide helpful suggestions.*

TECH TIP — *Used to provide helpful tips to ease the installation process.*

System Overview

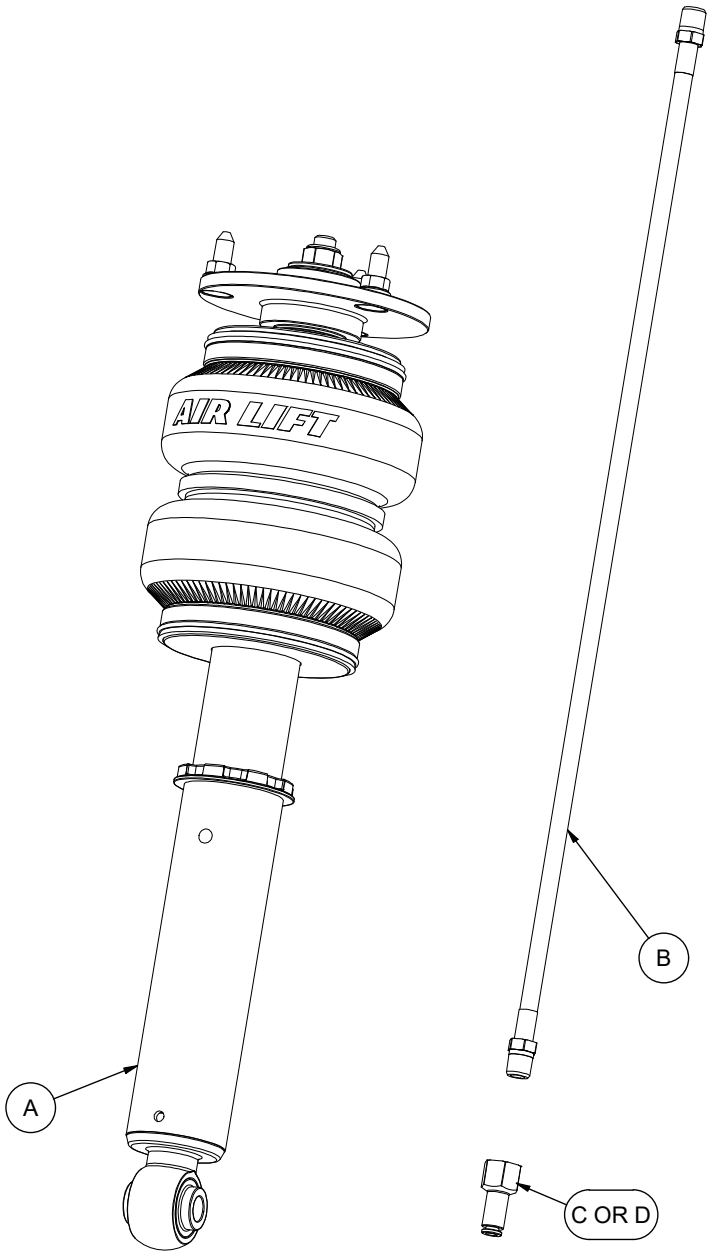

Fig. 1

HARDWARE CONTENT

Item	Part #	Description	Qty
A	35773	STRUT ASSEMBLY, GS RWD (06-12), FRONT	2
B	20997	LEADER LINE, 1/4" ID	2
C	21810	1/4" FNPT X 1/4" PTC FITTING, DOT	2
D	21987	1/4" FNPT X 3/8" PTC FITTING, DOT	2

STOP! Missing or damaged parts? Call Air Lift customer service at (800) 248-0892 for a replacement part.

Install the System

NOTES *See important safety notices on page 2.*

SECTION 1. PREPARE THE VEHICLE

1. Elevate and support the vehicle with a hoist or safety stands.

2. Remove the front tire and support the hub assembly. (Fig. 2)

Fig. 2

SECTION 2. STOCK SUSPENSION REMOVAL

1. Disconnect the headlight alignment linkage from the lower control arm. (Fig. 3)

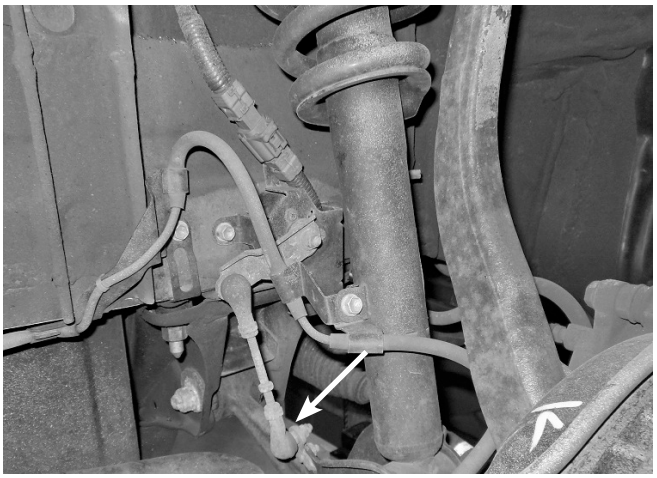

Fig. 3

2. Unbolt the wiring support bracket from the shock. (Figs. 4 & 5)

Fig. 4

Fig. 5

3. Remove the nut retaining the stabilizer bar end link to the lower control arm. (Fig. 6) Disconnect the end link from the arm.

Fig. 6

4. Remove the lower shock eye nut and bolt. (Figs. 7 & 8)

Fig. 7

Fig. 8

5. Within the engine compartment, remove the upper shock mount cover and three nuts. (Fig. 9)

Fig. 9

6. Support the hub to prevent over-extension of components before proceeding. Remove the cotter pin from the spindle to upper control arm ball joint (Fig. 10). Remove the nut (Fig. 11) and separate the ball joint from the spindle. Remove the shock assembly from the vehicle.

Fig. 10

Fig. 11

7. Reattach the spindle to the upper control arm ball joint (Fig. 12). Torque to 87Nm (64 lb.-ft.). Install a new cotter pin through the ball joint nut.

Fig. 12

SECTION 3. INSTALL THE KIT COMPONENTS

PLEASE READ - IMPORTANT INSTALLATION INFORMATION

FOR COIL TO AIR UPGRADE KIT INSTALLATIONS ONLY: Please refer to the included Coil to Air Upgrade Kit installation guide (MN-2000) for details on how to disassemble the coilovers and assemble the air springs.

Also refer to your control system installation guide to ensure the installation of your air suspension system is complete.

NOTES

All dampers come pre-set to even lengths, and locking collars are pre-tightened. It is always recommended to double-check that the dampers are the same length side to side, and the locking collars are tight.

Please refer to the User Guide included with the kit for any suspension setup adjustments.

1. Begin by installing the leader line (B) into the air spring. Tighten the appropriate fitting (C or D) to the leader line (1 3/4 turns beyond hand-tight). Tighten the leader line into the air spring 1 3/4 turns beyond hand-tight (Fig. 13).

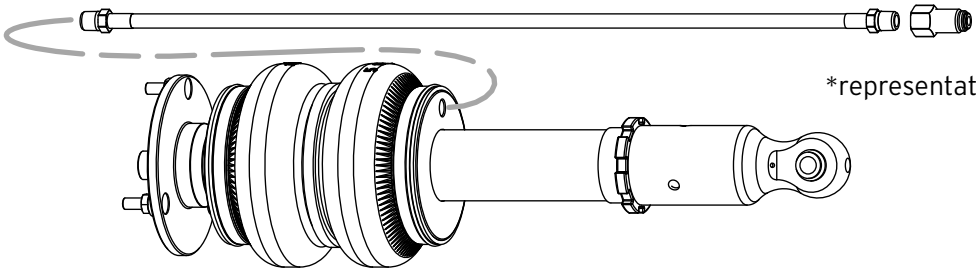

*representative strut shown

Fig. 13

2. Insert the shock (A) into the shock pocket and attach the three upper bracket nuts (Fig. 14). Torque to 67Nm (49 lb.-ft.).

NOTE

The images are representative, actual kit may differ.

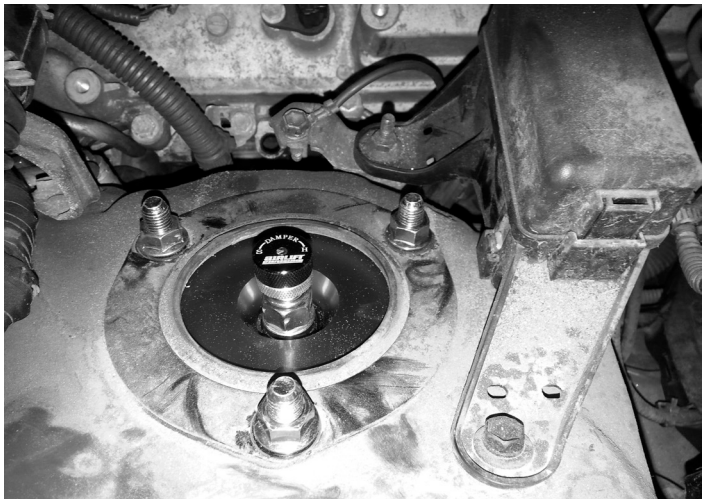

Fig. 14

3. Assemble the shock to the lower control arm with the previously removed nut and bolt (Fig. 15). Do not torque at this time. Nut will be torqued at desired ride height.

Fig. 15

4. Reconnect the stabilizer bar link to the lower control arm (Fig. 16). Torque the nut to 84Nm (62 lb.-ft.).

Fig. 16

5. Remove the nut and bolt from the locating bracket on the shock and position as needed for the wiring bracket. Bolt the wiring bracket to the shock (Fig. 17). Torque to 6Nm (53 lb.-in.).

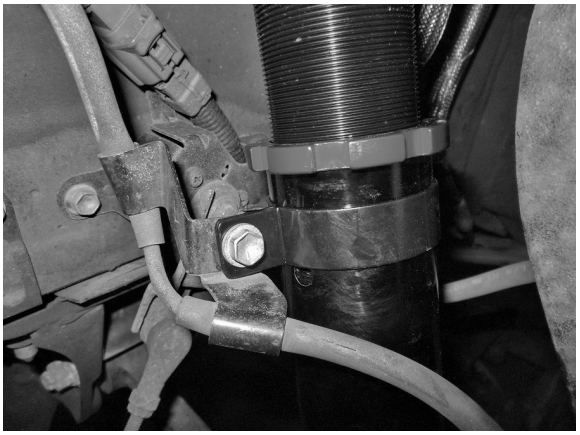

Fig. 17

6. Reattach the headlight alignment linkage to the control arm (Fig. 18). Torque nut to 6Nm (53 lb.-in.).

Fig. 18

SECTION 4. ROUTE THE AIR LINES

WARNING AFTER INSTALLATION, ENSURE ALL ORIGINAL EQUIPMENT VEHICLE SAFETY FEATURES ARE PROPERLY CALIBRATED BY A QUALIFIED TECHNICIAN. CHANGING VEHICLE HEIGHT MAY AFFECT FUNCTIONING OF SAFETY SENSORS AND CAMERAS.

1. Fully compress the suspension using a jack. With the suspension compressed, review the best routing for the air line that is clear of all suspension and steering components.

2. Routing should allow for the suspension to extend and steer without kinking, pulling the line tight, or rubbing on other components. Following the brake line routing is often a good place to start. Check clearances to all other components.

PLEASE READ – IMPORTANT INSTALLATION INFORMATION

Please refer to your control system installation guide for more details on air line routing and to ensure the installation of your air suspension system is complete.

Before Operating

SET THE RIDE HEIGHT

1. Refer to the User Guide supplied with this kit to set up the suspension.

Torque Specifications			
Location	Nm	lb.-ft.	lb.-in.
Upper mount to chassis	67	49	
Shock eye bolt	157	116	
Stabilizer link nut	84	62	
Wiring bracket to shock	6	-	53
Headlight alignment linkage	6	-	53
Lower control arm front bolt	135	100	
Lower control arm rear nut	113	83	
Upper control arm bolts to chassis	49	36	
Upper control arm ball joint to spindle	87	64	
Wheels	103	76	
Air fitting and leader line with sealant	1 3/4 turn beyond hand-tight		

2. Upon successful completion of the installation, follow these pressure requirements for the air springs.

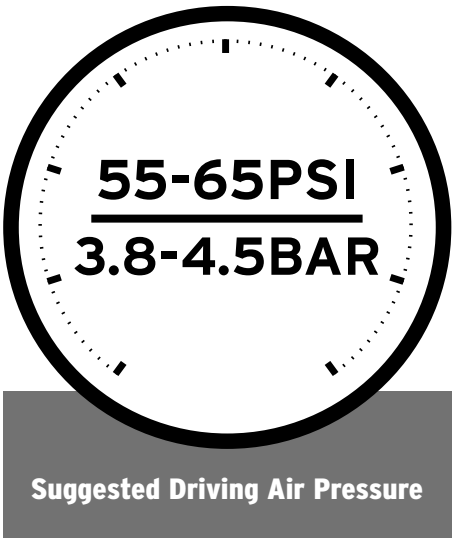

CAUTION FAILURE TO MAINTAIN ADEQUATE MINIMUM PRESSURE (OR PRESSURE PROPORTIONAL TO LOAD) MAY RESULT IN EXCESSIVE BOTTOMING OUT AND **WILL VOID THE WARRANTY.**

CHECK FOR BINDING

CAUTION MAKE SURE THE FRONT WHEELS ARE STRAIGHT WHEN DEFLATING AND REINFLATING AIR SPRINGS.

1. Inflate and deflate the system (do not exceed 8.6BAR [125 PSI]) to check for clearance or binding issues. With the air springs deflated, check clearances on everything so as not to pinch brake lines, vent tubes, etc. Clear lines if necessary.

2. Inflate the air springs to 5.2-6.2BAR (75-90 PSI) and check all connections for leaks.

INSTALLATION CHECKLIST

- ☐ **Clearance** – Inflate the air springs to 5.2-6.2BAR (75-90 PSI) and make sure there is at least 13mm (1/2") clearance from anything that might rub against the air spring. This should be checked with the air spring fully inflated and fully deflated.
- ☐ **Leak** – Inflate the air springs to 5.2-6.2BAR (75-90 PSI) and check all connections for leaks. All leaks must be eliminated before the vehicle is road-tested.
- ☐ **Heat** – Be sure there is sufficient clearance from heat sources, at least 152mm (6") from air springs and air lines. If a heat shield was included in the kit, install it. If there is no heat shield, but one is required, call Air Lift customer service at **(800) 248-0892**.
- ☐ **Fastener** – Recheck all bolts for proper torque.
- ☐ **Road** – Inflate the air springs to recommended driving pressures (see previous page). Drive the vehicle 16km (10 miles) and recheck for clearance, loose fasteners, and air leaks.
- ☐ **Operating instructions** – If professionally installed, the installer should review the operating instructions with the owner. Be sure to provide the owner with all paperwork that came with the kit.

DAMPING ADJUSTMENT

1. The dampers in this kit have 32 settings, or "clicks," of adjustable compression and rebound damping characteristics. Damping is changed through the damper rod using the supplied adjuster (example shown here) or a 3mm hex key (not included).

2. Turn the adjuster clockwise (H), and the damping settings are hardened, reducing oscillations and body motion. Turn the adjuster counterclockwise (S), and the damping is softened.

3. Each damper will need to be set after installation and your initial drive, as they are not pre-set. It may take multiple adjustments to dial in your ideal ride. A good starting point is in the middle at 16 clicks from full soft, then drive the vehicle and make adjustments either softer or stiffer.

For more information, refer to the user guide.

Thank you for purchasing Air Lift Performance products!

Need Help?

Contact Air Lift Company Customer Service at (800) 248-0892 or +1 (517) 322-2144 for calls from outside the U.S. and Canada.

Connect by searching for **Air Lift Performance** #LifeonAir

MADE IN USA
WITH GLOBAL
COMPONENTS

2727 Snow Road Lansing, MI 48917 or P.O. Box 80167 Lansing, MI 48908-0167
Toll Free (800) 248-0892 • Local (517) 322-2144 • Fax (517) 322-0240
www.airliftperformance.com

Air Lift Company reserves the right to make changes and improvements to its products and publications at any time. For the latest version of this manual, contact Air Lift Company at (800) 248-0892 or visit airliftperformance.com.

Printed in the USA
NJM-0526

California: ⚠WARNING: Cancer and Reproductive Harm – www.P65Warnings.ca.gov