FLOWMASTER INC.
THE PERFORMANCE TECHNOLOGY COMPANY

DELTA FORCE
PERFORMANCE INTAKES BY FLOWMASTER

Installation Instructions

615183D

2018-2027 JEEP JL WRANGLER
2020-2027 JEEP GLADIATOR
3.6L ENGINE

See CARB approved specific application in Overview section on page 2.

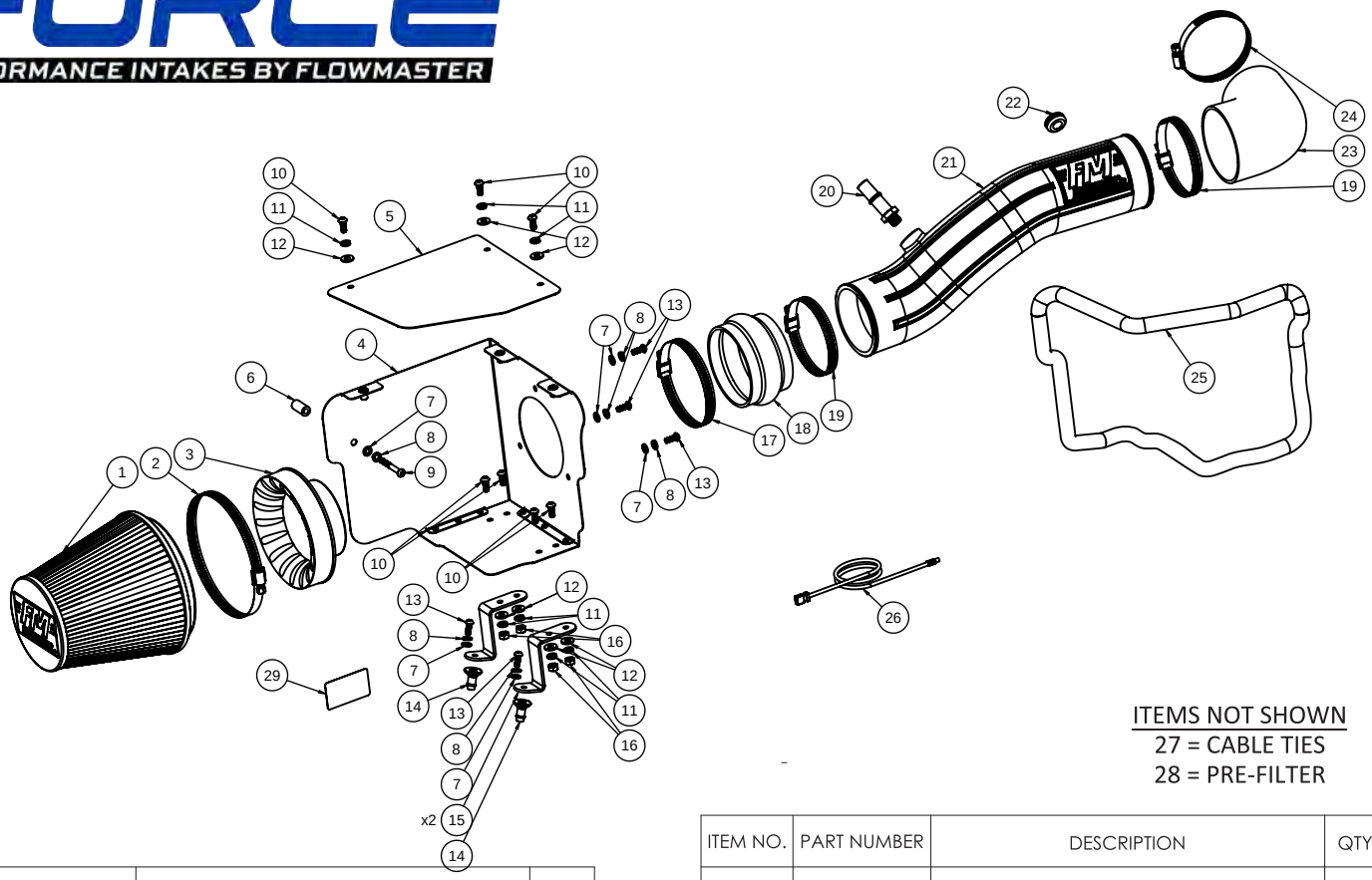

ITEMS NOT SHOWN
27 = CABLE TIES
28 = PRE-FILTER

ITEM NO.	PART NUMBER	DESCRIPTION	QTY.
1	AF1006	AIR FILTER, DRY MEDIA 7-1/2" × 6" DIA	1
2		CLAMP, SCREW, #104 (4-1/8" - 7")	1
3	AF6002	ADAPTER, AIR FILTER 4" × 6"	1
4	AF3081	HEAT SHIELD	1
5	AF3071	HEAT SHIELD COVER	1
6	HW533	SPACER, NYLON, 1/2" O.D. × 1" L	1
7	HW319	FLAT WASHER, M6	6
8	HW318	LOCK WASHER, M6	6
9	HW275	SCREW, M6 × 1.0 × 50MM	1
10	HW245	SCREW, 1/4"-20 × 5/8"	7
11	HW322	LOCK WASHER, 1/4"	7
12	HW320	FLAT WASHER, 1/4"	7
13	HW244	SCREW, M6 × 1.0 × 16MM	5
14	AF7001	BARBED PIN, M6 × 1.0	2

ITEM NO.	PART NUMBER	DESCRIPTION	QTY.
15	AF5085	BRACKET 1	2
16	HW115	NUT, 1/4"-20	4
17	MC400H	CLAMP, SCREW, #64 (3-9/16" - 4-1/2")	1
18	AF4009	COUPLER, FLEX 4" - 3-1/2" I.D. × 2-1/2" L	1
19	MC350H	CLAMP, SCREW, #56 (3-1/16" - 4")	2
20	AF4016	FITTING, STRAIGHT 5/8" QUICK CONN TO 1/4" NPT MALE	1
21	AF2069	INTAKE TUBE	1
22	AF4008	GROMMET, 1-1/16" OD × 1/2" ID × 3/16" THK	1
23	AF4075	COUPLER, 95°, 3-3/4" I.D. × 3-1/8" I.D.	1
24	MC314H	CLAMP, SCREW, #52 (2-13/16" - 3-3/4")	1
25	49000061	GASKET, HEAT SHIELD	60"
26	HW534	EXTENSION LEAD, INLET AIR TEMP SENSOR	1
27	HW523	CABLE TIE, 8-1/2" L × 1/8" W	2
28	615003P	PRE FILTER WRAP, FOR AF1002 (OILED) & AF1006 (DRY) FILTERS	1
29	D-698-10	EXECUTIVE ORDER DECAL	1

OVERVIEW:

2018-20 WRANGLER JL & 2020 GLADIATOR 3.6L

This product has been granted CARB EO D-698-10 for the applications listed above.

2018-27 WRANGLER JL & 2020-27GLADIATOR 3.6L

The above application is legal under the provisions of EPA's Tampering Policy dated November 23rd, 2020. The company has reasonable basis (test results) to verify that this product allows the vehicle to operate within legal emissions standards and is therefore legal to be sold for on-street use in all states that accept the legal provisions of the Clean Air Act and the EPA Tampering Policy. This product is NOT LEGAL FOR SALE OR USE IN THE STATE OF CALIFORNIA. Testing with the California Air Resources Board, in order to achieve 50-state compliance, is pending with CARB. Once testing is complete with California, and an E.O. number is issued, this product will be updated to 50-state legal status.

1. Take a moment to read and understand these instructions before installing your Flowmaster performance air intake kit.



2. Use the parts drawing and list (front page) to verify your kit's contents.

   To simplify assembly and avoid cross-threading fasteners, identify and separate the ¼-20 screws (item 10) (used with nuts (16) and heat shield cover (5)), and the M6 screws (13) (used with filter adapter (3) and barbed pins (14)).

REMOVE THE FACTORY AIR INTAKE SYSTEM:

3. Turn off the vehicle's ignition and disconnect the negative battery cable. **Failure to disconnect the battery may cause the CHECK ENGINE light to illuminate after the air intake kit is installed.**

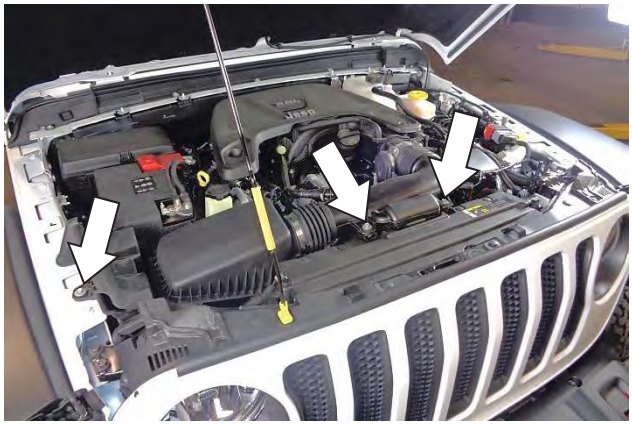

4. Remove the 3 intake mount bolts.

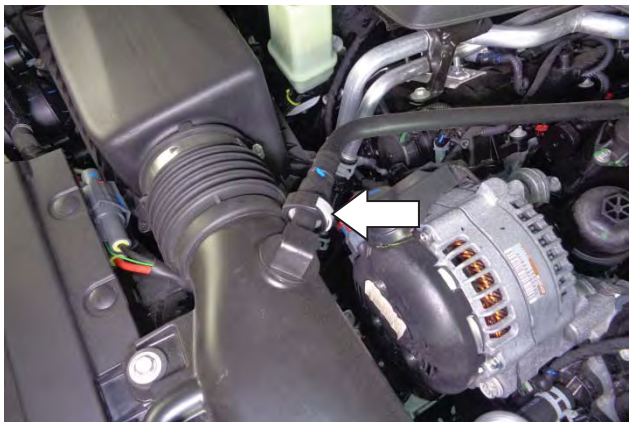

5. Disconnect the PCV line from the air inlet duct.

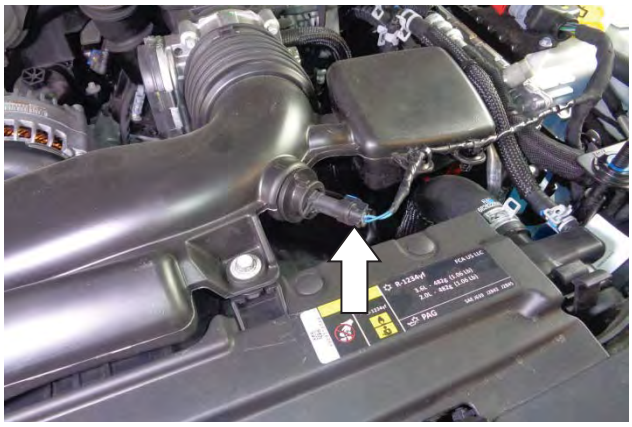

6. Disconnect the air temperature sensor plug by depressing the locking tab, then pulling it straight off the sensor.

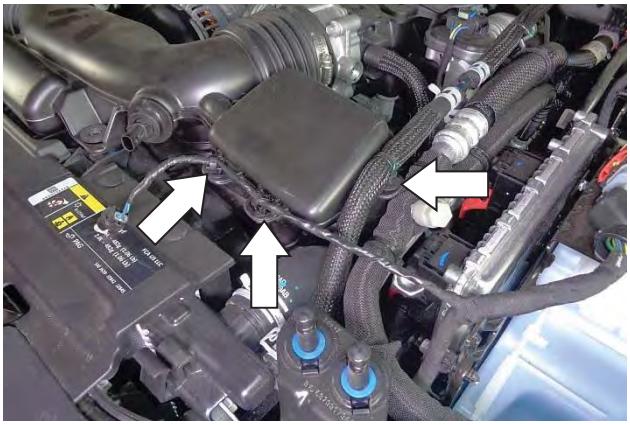

7. Separate the 3 wire loom clamps from the resonator.



8. Loosen the screw clamp connecting the inlet air duct to the throttle body, then separate the duct from the throttle body.



9. Pull the airbox up sharply to release it from its mount grommets, then remove the assembled airbox and ducts from the vehicle.

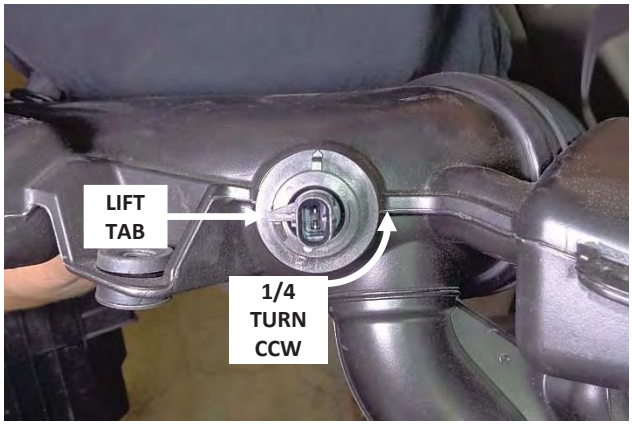

10. Remove the air temp sensor by lifting the locking tab and turning the sensor a quarter-turn counter-clockwise, then pulling it straight out of the duct. Then remove the o-ring from the sensor. **CAUTION: The sensor is delicate!** Handle it with care, and store it in a safe location until reinstallation.

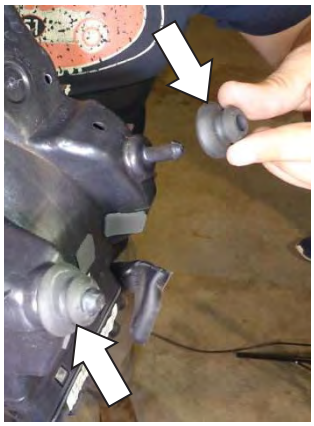



11. If either of the rubber mount grommets came out of the vehicle with the airbox, remove them from the airbox and install them in their holes in the vehicle frame.



12. At the bracket just forward of the battery, remove the inboard screw.

ASSEMBLE AND INSTALL YOUR FLOWMASTER PERFORMANCE AIR INTAKE SYSTEM:

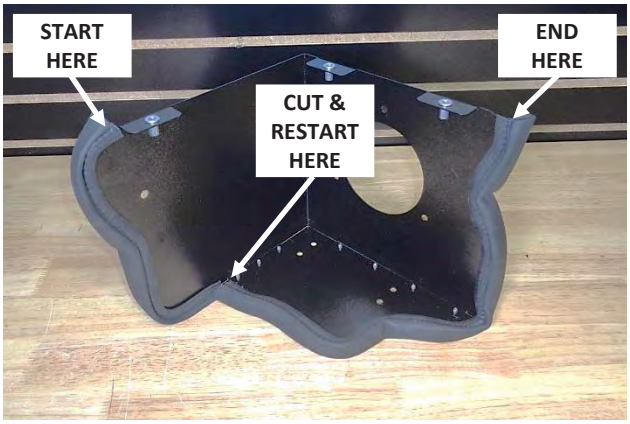

13. Attach gasket (25) to the heat shield (4), in 2 sections as shown. Firmly press the gasket onto the edge, and cut it to length using metal-cutting shears.



14. Attach gasket to the heat shield cover (5).

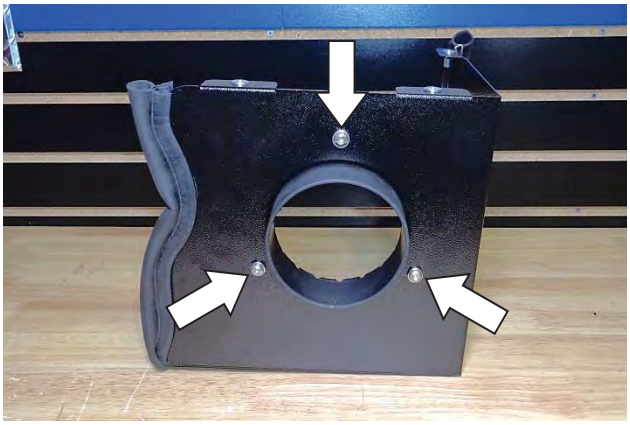

15. Assemble the air filter adapter (3) to the heat shield using M6 screws (13), lock washers (8) and flat washers (7).



16. Attach the 2 brackets (15) to the heat shield as shown, using ¼-20 screws (10) (against the heat shield), and flat washers (12), lock washers (11), and nuts (16) (against the brackets).



17. Fasten a barbed pin (14) to each bracket, using an M6 screw (13), lock washer (8) and flat washer (7).



18. Insert the rubber grommet (22) into the intake tube (21). Moistening the grommet with soapy water will ease insertion.





19. Carefully push the air temp sensor into the grommet, orienting the tab toward the tube's filter end. Moistening the grommet I.D. with soapy water will ease insertion. **NOTE: The sensor boss does not sit flush against the grommet; there will be a slight gap.**



20. Apply 2 wraps of nylon thread tape to the threads of the quick connect fitting (20), and install it in the intake tube.



21. Slip a #56 screw clamp (19) onto the small end of the reducing coupler (18), and install the coupler on the filter end of the intake tube. Then slip the #64 screw clamp (17) onto the other end of the coupler. Do not tighten the clamps at this time.



22. Slip the other #56 screw clamp (19) onto the large end of the elbow coupler (23), and install the coupler on the discharge end of the intake tube. Then slip the #52 screw clamp (24) onto the other end of the coupler. Do not tighten the clamps at this time.



23. Install the heat shield by pressing the 2 mount pins into their rubber grommets.



24. Secure the corner of the heat shield to the vehicle frame using the long M6 screw (9), lock washer (8), flat washer (7) and spacer (6).



25. Place the pre-filter wrap (28) and the #104 screw clamp (2) on the air filter (1). Then install the filter on the filter adapter, and tighten the clamp.



26. Install the assembled intake tube in the vehicle.



27. Push the reducing coupler fully up against the heat shield, then tighten the heat shield clamp.



28. Push the elbow coupler up against the throttle body stops, then tighten the throttle body clamp.



29. Center the intake tube between the couplers, then tighten the 2 remaining clamps.



30. Connect the PCV line to the quick connect fitting and check for security.



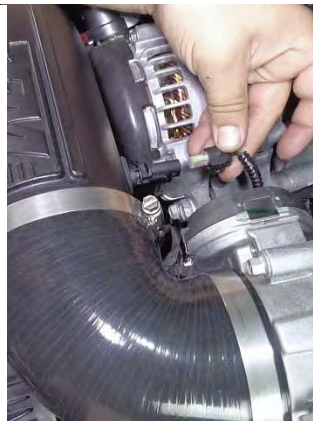

31. Connect the air temp sensor extension lead (26) to the vehicle's temp sensor plug. Then route the lead under the coupler, connect the other end to the air temp sensor, and check for secure connections at both ends.



32. Use 1 or 2 cable ties (27) (as necessary) to secure the temp sensor lead to nearby wiring or plumbing.



33. Attach the head shield cover to the heat shield using ¼-20 screws (10), lock washers (11), and flat washers (12).



34. Affix the CARB Exemption Order label to a clean, readily-visible location under the hood (e.g., near the hood latch), so an inspector can easily see it at emissions testing.



Congratulations, the installation of your FLOWMASTER performance air intake kit is now complete!

IMPORTANT: RETAIN THESE INSTRUCTIONS FOR FUTURE REFERENCE

FLOWMASTER INC.
THE PERFORMANCE TECHNOLOGY COMPANY

CLEANING YOUR FLOWMASTER DRY SYNTHETIC AIR FILTER and PRE-FILTER WRAP

DRY SYNTHETIC AIR FILTERS

NEVER WASH YOUR DRY AIR FILTER! However, if you drive in dusty conditions, periodically blowing the filter off with low-pressure (20-30 PSI) compressed air can extend its service life.

Inspect your filter about every 6,000 miles (or, every other oil change). When you see a buildup of dust between the pleats:



1. **Tap the filter** several times on a hard, flat surface. Tap it firmly enough to dislodge any loose particles from the pleats, but not so hard as to damage it.



2. **Blow off the outside** of the filter. Blow across the filter surface (at about a 45° angle), not through the filter material. Hold the air nozzle about 6 inches away from the filter surface, always keep it moving, and point the air jet in to—not across—the pleats.



3. **Blow through** the filter, from the inside out. Keep the nozzle moving; do not hold it stationary over one place on the filter.

Replace your filter every 15-30,000 miles—more often under dusty conditions, less often under normal highway conditions.

PRE-FILTER WRAP

If the pre-filter wrap is used, wash it as needed with warm water and dish soap, rinse with clear water, and pat dry with a towel.