START HERE

COGNITO SM Series Ball Joint Upper Control Arm Builders Kit for GM 2011-2019 2500/3500 2WD/4WD

INSTALL INSTRUCTIONS:

COGNITO SM Series Ball Joint Upper Control Arm Builders Kit for GM 2011-2019 2500/3500 2WD/4WD
SKU: 110-91146



COMPONENTS INCLUDED:

QUANTITY	PART #	DESCRIPTION
1	8689	COGNITO 2020+ GM 8-Lug SM UCA, Driver
1	8690	COGNITO 2020+ GM 8-Lug SM UCA, Passenger
2	91350	COGNITO Alpha Pro Ball Joint (40mm)
2	7057	CMS 40mm ALPHA PRO BILLET CAP
4	6879	PIVOT BUSHING, 16mm (MAINTENANCE FREE)
2	2100	COGNITO BADGE LOGO 4.75” OAL
2	HARDWARE-SPIROLOX-2.375	SPIROLOX 2.375” INTERNAL RETAINING RING
4	HARDWARE-RIVET-1/8	1/8” DIA X 3/16”-1/4” GRIP RANGE SS RIVET

TOOLS REQUIRED:

Floor Jack Jack Stands Torque Wrench	18mm Socket / Wrench 21mm Socket / Wrench

TECH NOTES:

- **Installation requires Cognito press tooling, part numbers 599-91157 & 599-91168.**
  - **599-91157 is for the pivot bushings, the tooling is sold separately and is reusable.**
  - **599-91158 is for ball joint installation, the tooling sold separately and is reusable.**
    - **Contact the Cognito Sales team to order.**
- Installation requires a 10 ton, or greater, press.
- Cutting of the OEM frame and suspension components is required.
- Trimming of front bumper trim may be necessary based off tire size.
- Front-end alignment will be required after completion.
- Proper vehicle lifting equipment is required. Always make sure the vehicle is properly supported and **never work under an unsupported vehicle.**
- Check the parts and hardware packages against the parts list to assure that your kit is complete before starting
- Read instructions carefully and study the pictures (if included) before attempting installation.
- If this product was purchased as part of a bundle/package, familiarize yourself with each set of instructions included with the bundle/package before beginning.
- Ball joints come pre-greased from the factory

WARNING

Please read this entire instruction sheet before beginning installation. Proper installation of these components requires a qualified mechanic. Always wear safety glasses when using power tools, and take appropriate precautions when working under a vehicle. If these instructions are not properly followed you may jeopardize your, and your passenger’s safety, and severe frame, suspension or tire damage may also result from improper installation.
Modification of vehicle suspension can interfere with ride-height sensors, active suspension, lane departure features, semi-autonomous, and autonomous driving features. It is the responsibility of the installer to determine feature compatibility prior to installation. Recalibration of sensors may be required in the event of any modification.

REQUIREMENTS:

- Installation requires a qualified mechanic.
- Follow the OE specifications when replacing or re-installing OE fasteners, retainers, and hardware specified in the OEM service manual.
- Always wear safety glasses when using power tools.
- When a lift is required to perform the installation of these products ensure the vehicle is properly supported before attempting installation or serious injury may occur.

INTRODUCTION:

Thank you for Purchasing the Cognito Ball Joint SM Series Upper Control Arm Builder's Kit. The builder's kit was specifically created for those who wish to add their own style to these arms. The builder's kit comes with raw sheet metal arms without any components installed, allowing for easy customization without the worry of damaging components during disassembly. The Cognito UCA kit will add performance due to a modified ball joint angle that eliminates travel limitations of the stock ball joint in leveled or lifted applications. The allowable droop travel is also improved with the design of these arms.
Designed and made in the USA

This Kit Install Summary will guide you through the **necessary order of steps** to install each of the individual components that comprise this kit in the required sequence to safely complete full and proper installation.

The proper installation of this combination of products is dictated by the necessary sequence in which each component must be installed to avoid access, interference or clearance issues that will result in unnecessary disassembly and reassembly and potential safety hazards.

This document will guide you through the sequence of operations, which includes preparatory work and the prescribed order for installing components – by referring you to the individual instructions packaged with each Cognito component for detail on how each kit component is properly installed.
YOU MUST FOLLOW THESE STEPS IN SEQUENTIAL ORDER FOR PROPER INSTALLATION OF THIS KIT.

REVIEW TECHNICAL NOTES AND REQUIREMENTS OF THE INDIVDUAL INSTALLATION INSTRUCTION SHEETS INCLUDED WITH THIS KIT BEFORE BEGINNING.

INSTALLATION

1. Begin by locating instruction sheet **110-90910** *for 110-91146* included with this kit. You will need it to do this install. If instructions are missing or damaged, contact Cognito Motorsports for where to find replacements.

2. Start with this summary sheet and follow the instructions listed below.

CONTROL ARM COATING

1. The raw sheet metal arm must be painted, or powder coated prior to installing any components or instillation on the vehicle.
   - **NOTE:**
     Warranty on Cognito products will be void if corrosion occurs.

2. The metal surface must be cleaned and prepared for coating. Cognito recommends the use of media blasting to clean the surface and prep it for coating.
   - **NOTE:**
     The bore for the ball joint must be masked off or plugged when prepping the arms for coating, (Figure 1). The bore for the ball joint is precision machined and must not be altered for proper press fit of the ball joint.

Figure 1: Surfaces to be Protected for Media Blasting

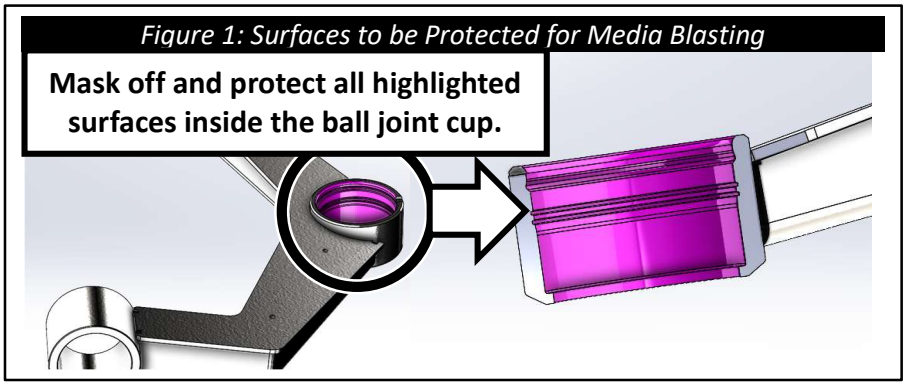

CONTROL ARM COATING CONT'D.

3. When coating the arms there are three areas that must be masked off and protected, (Figure 2).

- **NOTE:**
  Cognito recommends using the pivot tubes for racking / hanging the arms for the coating procedure.
  The bore for the ball joint must be masked off or plugged when coating the arms, (Figure 2). The bore for the ball joint is precision machined and must not be altered for proper press fit of the ball joint.
  The internal diameter (ID) of the pivot tubes must not be directly coated, overspray and light build up is acceptable. Heavy build up will lead to excessive force being required to install the bushings and can lead to the arm or bushings being damaged.

Figure 2: Surfaces to be Protected for Coating

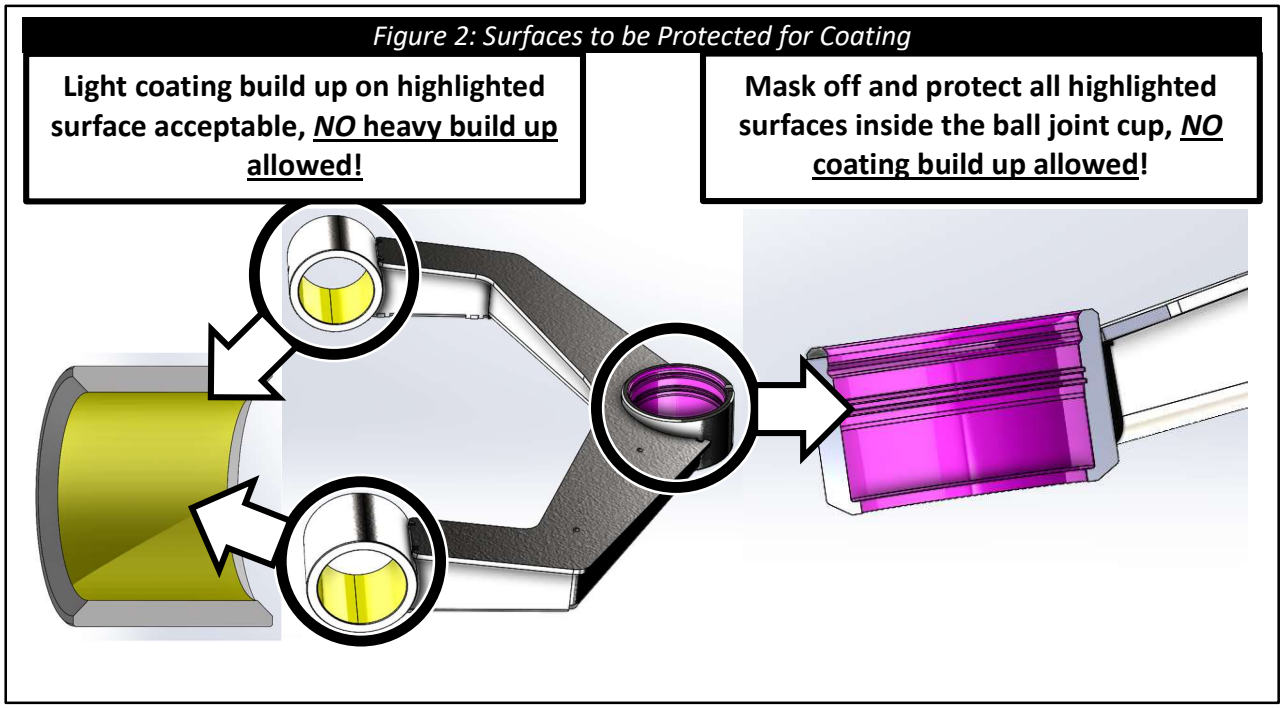

CONTROL ARM ASSEMBLY

1. Mount **2100**, Rivet On Cognito Badge Logo, to the coated arm with two of the 1/8” rivets provided in **BADGE-KIT-4.75**.
   - **NOTE:**
     Make sure the word Cognito can be read properly before riveting the badge on, (Figure 3). It is possible to get it inside out or upside down, pay attention to the G and the T in the word Cognito to get it right.

Figure 4: Correct Badge Orientation

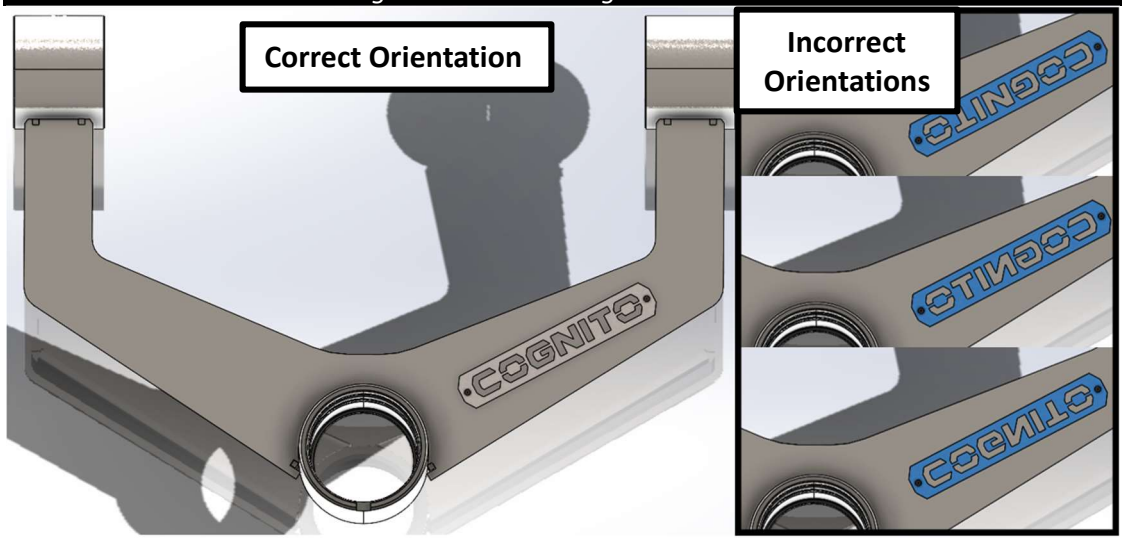

2. Apply a light coat of grease to the bore of the ball joint cup, (Figure 4), to prep for pressing in the ball joint.

Figure 3: Surfaces to Grease

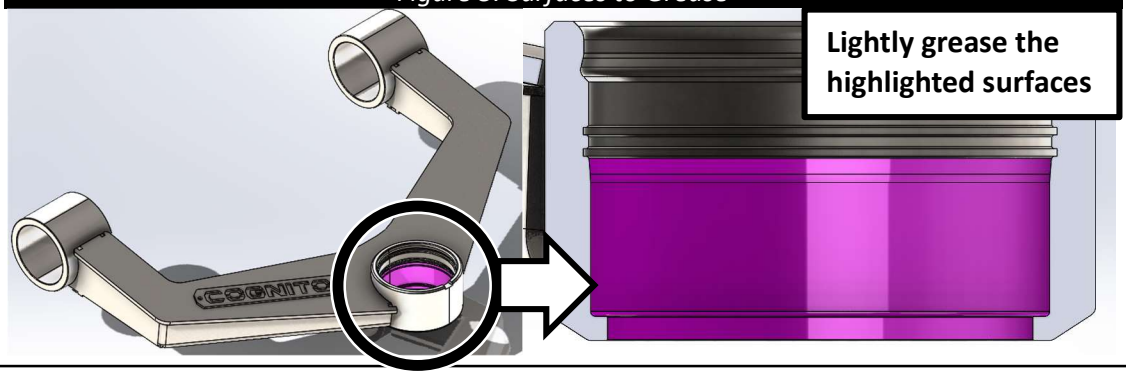

CONTROL ARM ASSEMBLY CONT'D.

3. Press **91350**, Press-In Ball Joint, into the arm using **599-91168**. Ensure the ball joint cup is flat and the ball joint is being pressed straight into the cup. Periodically, while pressing the ball joint into the arm, check the underside and pull the ball joint boot down to clear the ball joint seating surface. This helps to prevent it from getting pinched and damaged.
   - **NOTE:**
     The ball joint cup in not flat relative to the pivot tubes. The pivot tubes will be at an angle when the cup is flat, (Figure 5).
     Failure to ensure the ball joint is straight with the ball joint cup can lead to both the ball joint and arm being damaged and rendered unusable.
     DO NOT PRESS ON THE GREASE FITTING OF THE BALL JOINT. PRESS THE HOUSING USING 599-91168 OR ALTERNATIVELY PRESS THE FLAT SURFACE OF THE CAP, (Figure 6).
     Warranty on Cognito products will be void if damage occurs due to negligence during the assembly process.

Figure 5: Arm Flat to Ball Joint Cup.

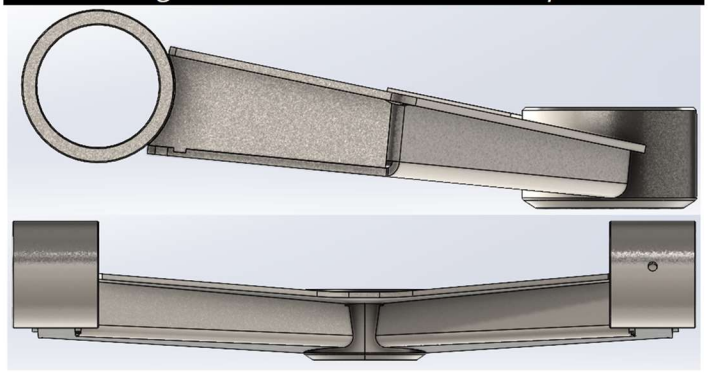

Figure 6: Pressing Surface

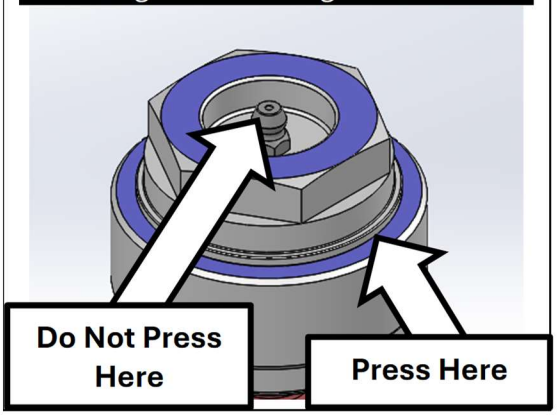

4. Install **HARDWARE-SPIROLOX-2.375**, 2.375" Spirolox Internal Retaining Ring, into the ball joint bore. Ensure the ring fully clips into the second groove, (Figure 7).
   - **NOTE:**
     If the retaining ring cannot reach the second groove or will not snap into place then the ball joint is not fully seated in the cup. The step above must be repeated to fully seat the ball joint once the retaining ring is removed.

Figure 7: Retaining Ring Groove



CONTROL ARM ASSEMBLY CONT'D.

5. Apply a light coat of grease to the ID of the pivot tubes to prep for pressing in the bushings.

6. Press **6879**, Pivot Bushing Assembly, into the arm. Use **599-91157**, Cognito bushing press tool, on top of the bushing to press them into the arm, pressing from the outside in, (Figure 8). Repeat for the second pivot tube.
   - **NOTE:**
     The inner flange of the bushing will extend past the pivot tube, failure to provide clearance can damage the bushing, (Figure 9). 599-91157, Cognito bushing press tool, is designed to provide the clearance needed for the bushing to be installed correctly.
     Ensure only the pivot tube getting the bushing pressed in is taking load. If the other pivot tube is loaded while pressing the bushing into the arm the arm will bend, damaging and rendering the arm unusable.
     Warranty on Cognito products will be void if damage occurs due to negligence during the assembly process.

Figure 8: Bushing Pressing Direction

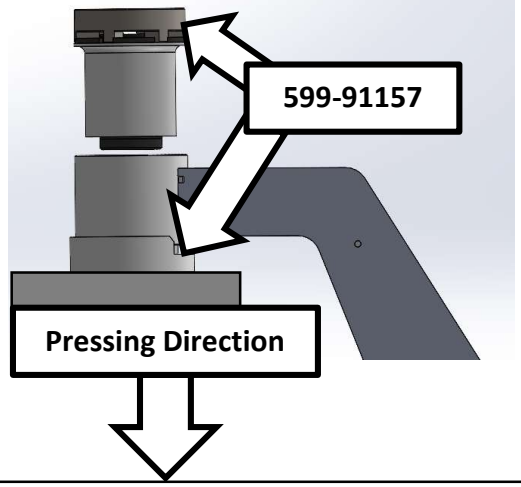

Figure 9: Bushing Installed



7. Apply a light coat of grease to the upper groove of the ball joint cup, (Figure 10), to prep for installing in the ball joint cap.

Figure 5

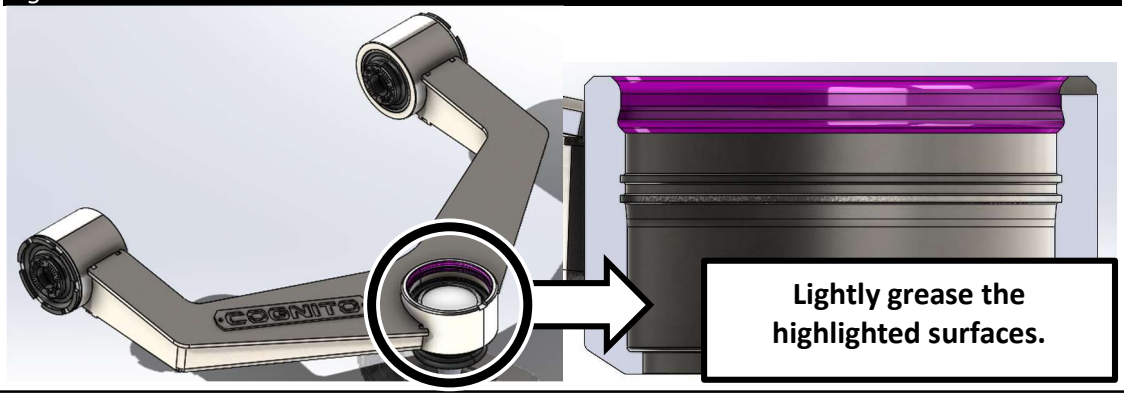

CONTROL ARM ASSEMBLY CONT'D.

8. Locate **7057**, Upper Ball joint Cap. Check the installed O-ring for any twists or kinks, correct as needed. The O-ring is what holds the cap into the ball joint cup and the light coat of grease applied in the step prior will help the O-ring seal the ball joint cup.

9. Install the upper ball joint cap, rotate the cap so the logo is straight before pushing the cap into place by hand (Figure 11).

Figure 11: Ball Joint Cap



INSTALLATION CONT'D

3. After the control arm is coated and assembled, refer to instruction set **110-90910**. Work through the install sheet to completion.

This completes the installation steps, enjoy your new customized Cognito SM Series Ball Joint Upper Control Arm!

WARRANTY / RETURN POLICY / SAFETY

Cognito Limited Lifetime Warranty

Cognito Motorsports, Inc. hereinafter "Cognito," warrants to the original retail purchaser, that its suspension products are free from workmanship and material defects for as long as the purchaser owns the vehicle on which the product(s) were originally installed. This warranty will be void if any modifications are made to the components, including alterations to the surface finish, i.e.; painting, powder coating, plating, and/or welding, or if they are improperly installed. Cognito truck suspension products are not designed nor intended to be installed on "competition" vehicles used in race applications, stunt or for exhibition purposes that are outside of the intended operating conditions specified by the manufacturer. Racing and competition are defined as any contests between two or more vehicles; or vehicles competing individually on off road circuits in timed events (whether or not such contests are for an award or prize).

This warranty does not include coverage for police, taxi, government or commercial vehicles, and the warranty does not cover Cognito products sold outside of the USA. Cognito's obligations under this warranty are specified and applied at its sole discretion, and warranty coverage is limited to repair or replacement of the defective product(s). Any and all costs of removal, installation or reinstallation; freight charges, incidental or consequential damages associated with the covered products are expressly excluded from this warranty.

The following items are exempt from Cognito limited warranty coverage: bushings, bump stops, tie-rod ends (Heim joints) and limiting straps. These parts are "consumables" and designed to wear as a normal part of their duty cycle, therefore they are not considered defective when worn. The aforementioned products are warrantied separately against defects in workmanship, for 60 days from the date of purchase. As a condition of warranty validation, respective Cognito suspension components must be installed as a complete system (not combined with non-Cognito hardware or ancillary parts). Any substitutions or omission of required components will void the warranty. Some minor cosmetic wear and imperfections may occur to parts during shipping, which is not covered under this warranty. This limited warranty does not apply to any components that have been subjected to collision damage, negligence, alteration, abuse, or misuse, and coverage does not extend to products manufactured by third-party companies. Cognito reserves the right to supersede, discontinue, or change the design, finish, part number and/or application of its parts when deemed necessary, without notice.

Return Policy

Product returns will not be accepted without prior written approval from an authorized Cognito representative. All products being returned must be shipped via trackable, prepaid freight. Returned products are subject to a 25% percent restocking fee. The eligible return period for products purchased directly from Cognito is 30 days from the verified date when the product(s) were originally received by the purchaser.

Product Safety Advisory

The installation of Cognito steering and suspension components will modify your vehicle's original factory equipment and geometry, which may cause it to handle differently than a stock (unaltered) vehicle. Installation of these components is not intended to strengthen nor reinforce the vehicle's frame, nor are they designed to increase rollover protection. It is necessary to periodically inspect all suspension and drive train components for proper attachment, torque specifications, operation, and for any potential unusual wear or damage. Installation of these parts will modify the height of the vehicle and may raise the center of gravity. Modifying vehicle height combined with off road operation may increase your vehicle's susceptibility to rollover conditions, which may cause serious injury or death. Many states regulate allowable vehicle height modifications, and it is your responsibility to know and comply with the legal requirements specified by the laws where you reside. Modifications to your vehicle's ride height may also affect the ride quality, driver input response, trackability and handling, and wear to your vehicle's suspension components and tires.

34935 Flyover Ct Bakersfield, CA 93308 Phone: (866) 426-4648 Fax: (661) 588-8295
www.cognitomotorsports.com