INSTALLATION INSTRUCTIONS

	FTS21274	0-6” UNIBALL UCA KIT
1	FT20868	UNIBALL CONTROL ARM (DRIVER)
1	FT20869	UNIBALL CONTROL ARM (PASSENGER)
1	FT20899	HARDWARE SUBASSEMBLY

	FT20899	HARDWARE SUBASSEMBLY
1	FT20900	HARDWARE KIT
2	FT90152	MISALIGNMENT (UPPER)
2	FT90153	MISALIGNMENT (LOWER)
1	FT90154	BEARING CAP KIT
8	FT20836	CONTROL ARM WASHER
2	FT94531	UNIBALL ADAPTER PIN
1	FT21274i	INSTRUCTIONS
1	FTAS12	STICKER FT BLUE 10X4
1	FTAS16	DRIVER WARNING DECAL
1	FTREGCARD	REGISTRATION CARD
4	FT1037	BUSHING (OUTER)
4	FT1038	BUSHING (INNER)
4	FT626	SLEEVE
1	FTLUBE	URETHANE GREASE PACKET

	FT20900 - HARDWARE KIT	LOCATION
4	M14-2.0 X 100MM HEX BOLT	
8	M14 WASHER	
4	M14-2.0 C-LOCK NUT	
2	1/2” SAE WASHER	
2	1/2-20 C-LOCK NUT	
2	1/2-20 X 1” 12PT CAP SCREW	
4	1/4-28 GREASE FITTING	
1	THREAD LOCKING COMPOUND 1 MIL	

2019-2024 GM 1500 2WD/4WD

0-6” UNIBALL UPPER CONTROL ARM KIT

FTS21274

NOTE: TO ORDER WEARABLE REPLACEMENT COMPONENTS DO NOT USE PART NUMBERS SHOWN ON THIS INSTRUCTION SHEET. GO TO FABTECH WEBSITE AND LOOK UP WEARABLE REPLACEMENT PARTS TO FIND THE PROPER PART NUMBER TO ORDER.

Fabtech Motorsports | 2213 Industrial Park Rd. Lancaster, SC 29720

Tech Line: 909-597-7800 | **Web:** www.fabtechmotorsports.com

- TOOL LIST -

Required Tools (Not Included)

- Basic Hand Tools
- Floor Jack
- Jack Stands
- Torque Wrench
- Die Grinder w/ Cutoff Wheel or Sawzall
- Assorted Metric and S.A.E sockets, and Allen wrenches

- PRE-INSTALLATION NOTES -

For technical assistance call: **909-597-7800** or e-mail: **info@fabtechmotorsports.com**

READ THIS BEFORE YOU BEGIN INSTALLATION -

Check all parts to the parts list above before beginning installation. If any parts are missing contact Fabtech at 909-597-7800 and a replacement part will be sent to you immediately.

Read all instructions thoroughly from start to finish before beginning the installation. If these instructions are not properly followed severe frame, driveline and / or suspension damage may occur.

Check your local city and state laws prior to the installation of this system for legality. Do not install if not legal in your area.

Prior to the installation of this suspension system perform a front end alignment and record. Do not install this system if the vehicle alignment is not within factory specifications. Check for frame and suspension damage prior to installation.

The installation of this suspension system should be performed by two professional mechanics.

This suspension must be installed with Fabtech shock absorbers.

Installation of all fasteners requires the use of provided thread locking compound with proper torque values as indicated throughout the installation. Apply thread locking compound upon the final torque of the fastener.

WARNING- Installation of this system will alter the center of gravity of the vehicle and may increase roll over as compared to stock.

Vehicles that receive oversized tires should check ball joints, uniballs, tie rods ends, pitman arm and idler arm every 2500-5000 miles for wear and replace as needed.

Verify differential fluid is at manufactures recommended level prior to kit installation. Installation of the kit will reposition the differential and the fill plug hole may be in a different position. (For example, if the manufacture recommends 3 quarts of fluid, make sure the diff has 3 quarts of fluid). Check your specific manual for correct amount of fluid.

FOOTNOTES -

- Does not fit 2019 Chevy Silverado LD or 2019 GMC Sierra Limited 1500 models. Use 2018 model application for these vehicles.
- Will not fit vehicles equipped with super cruise

- INSTRUCTIONS -

1. Disconnect the negative terminal on the battery. Jack up the front end of the truck and support the frame rails with jack stands. **NEVER WORK UNDER AN UNSUPPORTED VEHICLE!** Remove the front tires.

2. Disconnect the ABS wire bracket from the upper control arm. **SEE FIGURE 1**

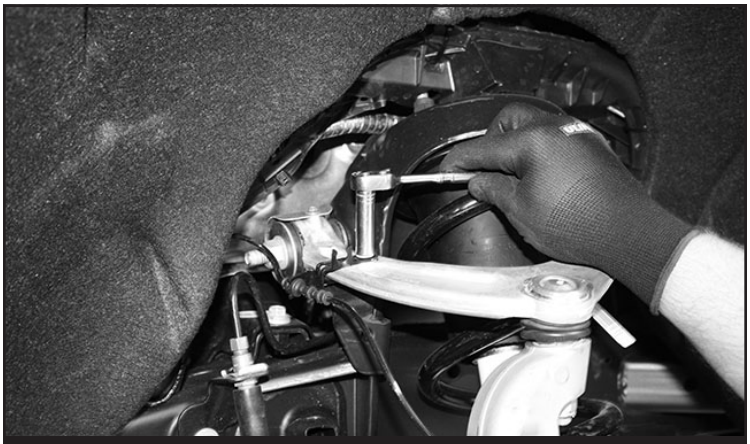

FIGURE 1 - STEP 2

3. Loosen the upper ball joint nut and strike the knuckle with a hammer until it comes loose from the upper control arm. Next, remove the factory nut. Then, detach the knuckle from the upper control arm. Push the knuckle to the side and secure if possible. **SEE FIGURE 2**

FIGURE 2 - STEP 3

4. Remove the factory upper control arm from the vehicle. Save hardware.

5. Locate the new Fabtech control arms, two FT1038 bushings, two FT1037 bushings, two FT84 grease zerks, and two sleeves. Using the supplied grease packet, grease the bushings and sleeves before installing into the control arm. **SEE FIGURE 3**

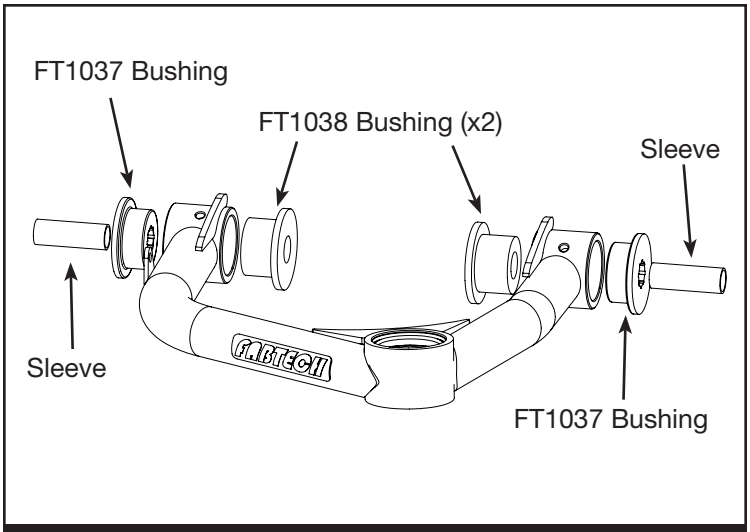

FIGURE 3 - STEP 5

6. Locate the factory bumpstop tabs on the frame mount. Using a cutoff wheel, remove this tab completely off the mount and sand to a smooth finish. **SEE FIGURES 4-5**

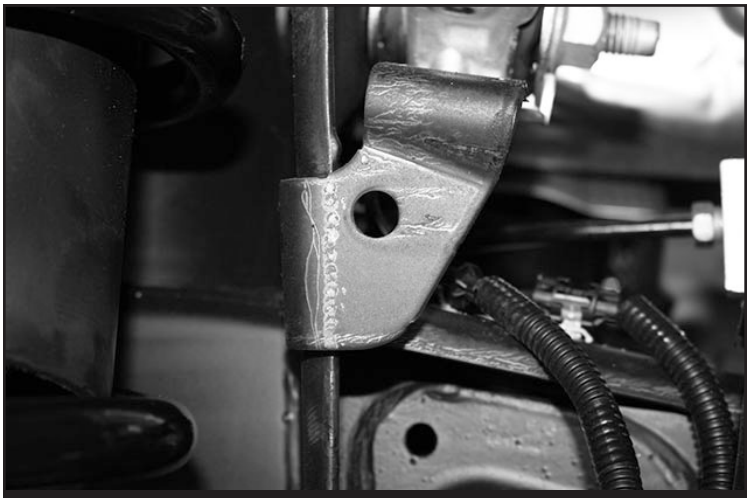

FIGURE 4 - STEP 6

FIGURE 5 - STEP 6

7. Install the FT20868 (Driver) & FT20869 (Pass) upper control arms using the supplied M14 hardware. Install the bolts with the bolt head inside the tower and the threaded end outside. **NOTE: When installing the arms, install a FT20836 (washer) on both sides of the bushings. Do not tighten at this time. Final locktite/ torque procedure will be done at step 11. SEE FIGURE 6**

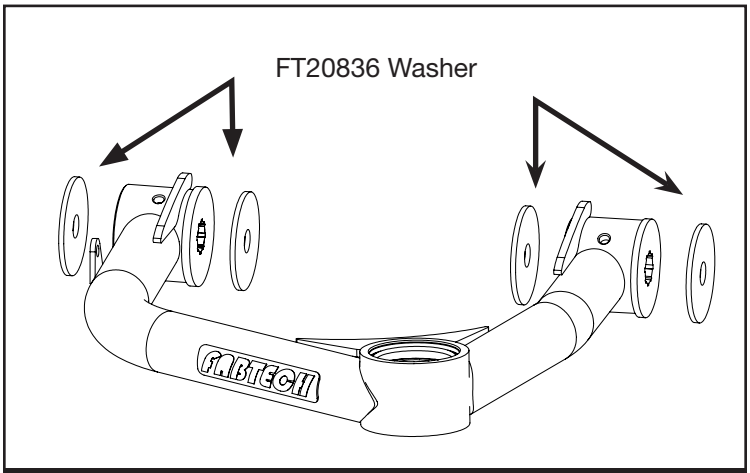

FIGURE 6 - STEP 7

8. Install FT90153 (Lower misalignment) onto FT94531 (Uniball Pin). Then, install into the factory control arm using the supplied 1/2” nut and washer. Torque the nut to 120 ft-lbs. using a 15/16” open end wrench on the pin end. **SEE FIGURE 7**

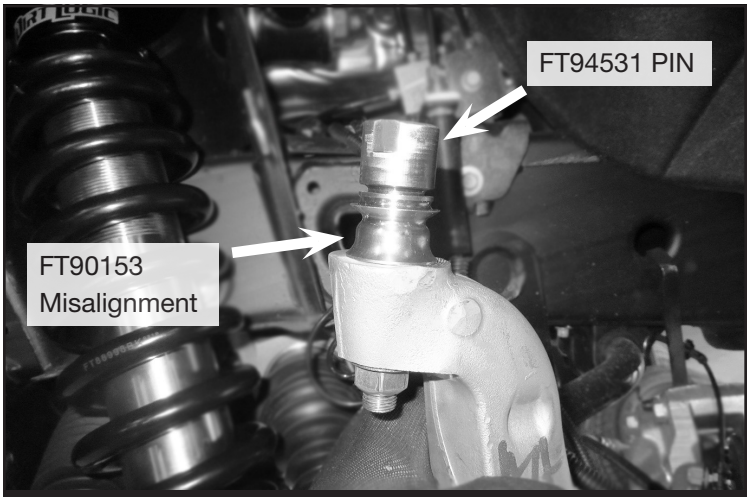

FIGURE 7 - STEP 8

9. Attach the new upper control arm to the knuckle by inserting the FT90152 (Upper misalignment) into the uniball bearing then the 1/2-20 - 12 point bolt. Torque to 120 ft-lbs. Install FT90154 (Bearing cap). **SEE FIGURE 8**

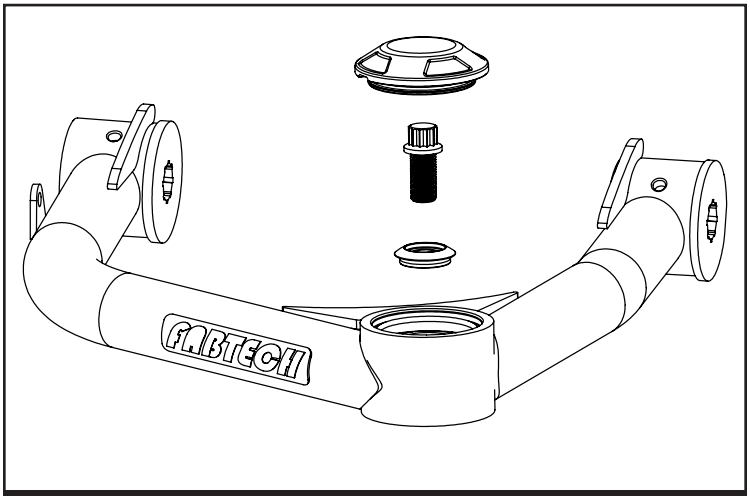

FIGURE 8 - STEP 9

10. **Repeat steps on the passenger side.**

11. Using the supplied thread lock, torque the upper control arm frame pocket hardware to 148 ft-lbs. **NOTE: Removal of the nut may be necessary to apply the thread lock compound.**

12. Remove the ABS bracket from the lines and discard. Secure the ABS lines to the frame using a zip tie. **SEE FIGURES 9-10**

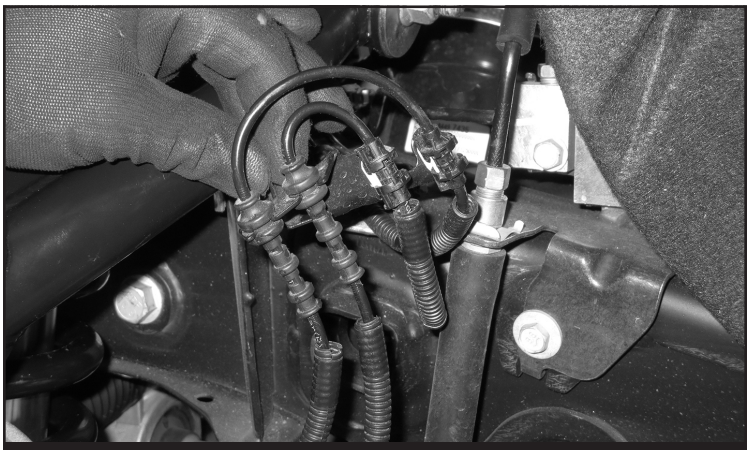

FIGURE 9 - STEP 12

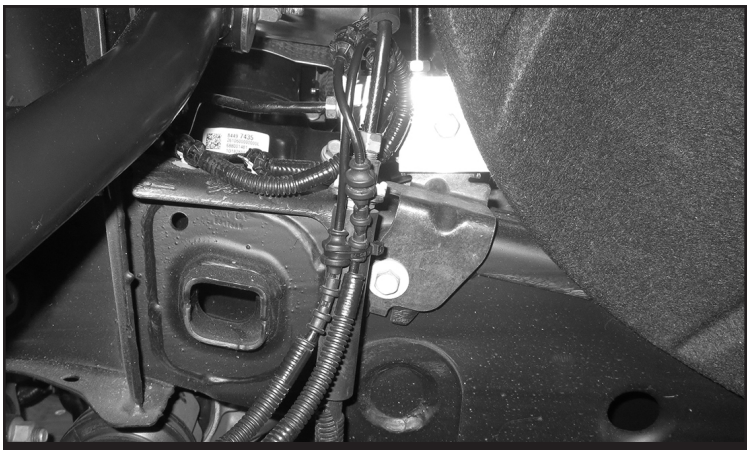

FIGURE 10 - STEP 12

13. **Repeat steps on the passenger side.**

14. Install tires and wheels and torque lug nuts to wheel manufacturer's specifications. Turn front tires left to right and check for appropriate tire clearance. **Note - Some oversized tires may require trimming of the front bumper & valance.**

15. Check front end alignment and set to factory specifications.

16. Recheck all bolts for proper torque.

17. Recheck brake hoses, ABS wires and suspension parts for proper tire clearance while turning tires fully left to right.

18. Install Driver Warning Decal. Complete product registration card and mail to Fabtech in order to receive future safety and technical bulletins on this suspension.

Vehicles that will receive oversized tires should check ball joints, uniballs and all steering components every 2500-5000 miles for wear and replace as required.

RETORQUE ALL NUTS, BOLTS AND LUGS AFTER 50 MILES AND PERIODICALLY THEREAFTER.

For technical assistance call: **909-597-7800**

- Product Warranty and Warnings -

Fabtech provides a Limited Lifetime Warranty to the original retail purchaser who owns the vehicle, on which the product was originally installed, for defects in workmanship and materials.

The Limited Lifetime Warranty excludes the following Fabtech items; bushings, bump stops, ball joints, tie rod ends, limiting straps, cross shafts, heim joints and driveshafts. These parts are subject to wear and are not considered defective when worn. They are warranted for 60 days from the date of purchase for defects in workmanship.

Dirt Logic and Performance Coilover take apart shocks are considered a serviceable shock with a one year warranty on leakage only. Service seal kits are available separately for future maintenance. All other shocks are covered under our Limited Lifetime Warranty.

Fabtech does not warrant any product for finish, alterations, modifications and/or installation contrary to Fabtech's instructions. Alterations to the finish of the parts including but not limited to painting, powder coating, plating and/or welding will void all warranties. Some finish damage may occur to parts during shipping, which is considered normal and is not covered under warranty.

Fabtech products are not designed nor intended to be installed on vehicles used in race applications or for racing purposes or for similar activities. (A "RACE" is defined as any contest between two or more vehicles, or any contest of one or more vehicle against the clock, whether or not such contest is for a prize). This warranty does not include coverage for police or taxi vehicles, race vehicles, or vehicles used for government or commercial purposes. Also excluded from this warranty are sales outside of the United States of America.

Installation of most suspension products will raise the center of gravity of the vehicle and will cause the vehicle to handle differently than stock. It may increase the vehicle's susceptibility to a rollover, on road and off road, at all speeds. Extreme care should be taken to operate the vehicle safely at all times to prevent rollover or loss of control resulting in serious injury or death. Fabtech front end Desert Guards may impair the deployment or operation of vehicles equipped with supplemental restraining systems/air bag systems and should not be installed if the vehicle is equipped as so.

Fabtech makes every effort to ensure suspension product compatibility with all vehicles listed on the website, but due to unknown auto manufacturer's production changes and/or inconstancies by the auto manufacturer, Fabtech cannot be responsible for 100% compatibility, including the fitment of tire and wheel sizes listed. The Tire and Wheel sizes listed in Fabtech's website are only a guideline for street driving with noted fender trimming. Fabtech is not responsible for damages to the vehicle's body or tires. Fabtech is not responsible for premature wear of factory components due to the installation of oversized tires and wheels.

Fabtech's obligation under this warranty is limited to the repair or replacement, at Fabtech option, of the defective product only. All costs of removal, installation or re-installation, freight charges, incidental or consequential damages are expressly excluded from this warranty. Fabtech is not responsible for damages and/or warranty of other vehicle parts related or non related to the installed Fabtech product. This warranty is expressly in lieu of all other warranties expressed or implied. This warranty shall not apply to any product that has been subject to accident, negligence, alteration, abuse or misuse as determined by Fabtech.

Fabtech suspension components must be installed as a complete system including shocks as shown on our website. All warranties will become void if Fabtech parts are combined and/or substituted with other aftermarket suspension products. Combination and/or substitution of other aftermarket suspension parts may cause premature wear and/or product failure resulting in an accident causing injury or death. Fabtech does not warrant products not manufactured by Fabtech.

Depending on the condition of the factory suspension components retained after the installation of a Fabtech suspension not all vehicles may have the same ride stance front to rear as described in the website. The blue color of suspension components shown in all Fabtech photographs are for display purposes only. Majority of all Fabtech components will be black specifically where noted with part numbers ending in BK.

Installation of Fabtech product may void the vehicles factory warranty; it is the consumer's responsibility to check with their local vehicle's dealer for warranty disposition before the installation of the product. Some state laws may prohibit modification of suspension to a vehicle in whole or in part. It is the responsibility of the installer and consumer to consult local laws prior to the installation of any Fabtech suspension product to comply with such written laws.

It is the responsibility of the distributor and/or the retailer to review all warranties and warnings of Fabtech products with the consumer prior to purchase.

Fabtech reserves the right to super cede, discontinue, change the design, finish, part number and/or application of parts when deemed necessary without written notice. Fabtech is not responsible for misprints or typographical errors within the website or price sheet. For the most recent Product Warranty and Warnings visit our website www.fabtechmotorsports.com